Gearboxes

Operating Instructions
Types SR, FG, S, SS, SM(N), SSM

Rehfuss Drive Solutions GmbH
Vor dem Weißen Stein 21
72461 Albstadt, Germany

Fon +49 (0) 74 32 / 70 15 - 0 **E-mail: info@rehfuss.com**
Fax +49 (0) 74 32 / 70 15 - 90 **Internet: www.rehfuss.com**

097.99999.00012.3

Contents

issued 08/2020

1	**Important Notes**	**4**
2	**Safety Notes**	**5**
2.1	Safety notes for standard use	5
2.2	Designated use	5
2.3	Transport	5
2.4	Gearboxes with extended storage	6
2.5	Installation	6
2.6	Start up	6
2.7	Inspection / Maintenance	6
3	**Construction of gearbox**	**7**
3.1	Basic construction helical gear 1-step SR120 – SR160	7
3.2	Basic construction helical gear 2-step SR210 – SR260	8
3.3	Basic construction helical gear 3-step SR320 – SR360	9
3.4	Basic construction helical gear SR270 – SR370	10
3.5	Basic construction shaft mounted gearboxes Type FG	11
3.6	Basic construction worm gearbox S030 – S050 solid shaft	12
3.7	Basic construction worm gearbox S030 – S050 hollow shaft	13
3.8	Basic construction helical worm gearbox SS130 – SS150 solid shaft	14
3.9	Basic construction helical worm gearbox SS130 – SS150 hollow shaft	15
3.10	Basic construction helical worm gearbox SS160 – SS170 solid shaft	16
3.11	Basic construction helical worm gearbox SS160 – SS170 hollow shaft	17
3.12	Basic construction worm gearbox SM011, SM(N)021, SM(N)031 solid shaft / hollow shaft	18
3.13	Basic construction worm gearbox SM041 solid shaft / hollow shaft	19
3.14	Basic construction worm gearbox SM(N)051 – SM061 solid shaft	20
3.15	Basic construction worm gearbox SM(N)051 – SM061 hollow shaft	21
3.16	Basic construction worm gearbox SSM121 – SS131	22
3.17	Basic construction worm gearbox SSM151 – SS161	23
3.18	Basic construction slip clutch	24
3.19	Basic construction IEC – Adapter	25
3.20	Basic construction free input shaft	26
4	**Mechanical Installation**	**27**
4.1	Required tools	27
4.2	Before you start	27
4.3	Preparation	27
4.4	Installation of gearbox	28
4.5	Gears with solid shaft	29
4.6	Mounting torque arm	30
4.7	Mounting / dismantling of shaft gearboxes with hollow shaft	30
4.8	Mounting / dismantling of shaft gears with shrink discs and cowl	30
4.9	Mounting IEC – Adapter	31
4.10	Mounting IEC – Adapter with adapter flange	32
4.11	Mounting IEC – Adapter SM041	33
4.12	Mounting on free input shaft	34

Contents

5	**Installation**		**35**
	5.1	Control lubricant with Oil level screw	35
	5.2	Control lubricant on gearboxes without Oil level screw	35
	5.3	Starting of worm gearboxes	35
	5.4	Starting of helical and shaft mounted gearboxes	35
	5.5	Starting gears and geared motors	35
6	**Inspection and Maintenance**		**36**
	6.1	Inspection and maintenance intervals	36
	6.2	Change intervals of lubrications	36
	6.3	Change intervals of rolling bearings	36
	6.4	Inspection and maintenance gearboxes	38
	6.5	Inspection and maintenance IEC – Adapter	38
	6.6	Inspection and maintenance free input shaft	38
7	**Malfunctions**		**39**
	7.1	Malfunction of gearbox	39
	7.2	Malfunction of IEC – Adapter	40
	7.3	Malfunction on free input shaft	40
8	**Types / Mounting positions**		**41**
	8.1	General information about mounting positions	41
	8.2	Mounting position SR 1-step	42
	8.3	Mounting position SR 2-step	43
	8.4	Mounting position FG	44
	8.5	Mounting position S	45
	8.6	Mounting position SS	46
	8.7	Mounting position SM(N) / SSM	47
9	**Lubricants**		**48**
		Table: Capacity	49
		Table: Lubrications	50

1 Important Notes

Always follow the safety and warning instructions contained in this publication!

Electrical hazard
Possible consequences: Severe or fatal injuries.

Hazard
Possible consequences: Severe or fatal injuries.

Hazardous situation
Possible consequences: Slight or minor injuries.

Harmful situation
Possible consequences: Damage to the drive and the environment

Tips and useful information

A requirement of fault-free operation and fulfilment of any rights to claim under guarantee is that you adhere to the information in the operating instructions. Consequently, read the operating instructions before you star operating the drive!

Keep the operating instructions in the vicinity of the unit since they contain important information about servicing the unit.

Waste disposal
(please dispose of the parts in accordance with the applicable regulations)
parts of housing, gears, shafts and rolling bearings of the gearboxes are to be disposed as iron. Cast parts as well when there is no special collection.
Worm wheels are partly made from non-ferrous materials and are to be disposed of in accordance to applicable regulations.
Collect used oil and dispose of in accordance to applicable regulations.

2 Safety Notes

2.1 Safety notes for standard use

Preliminary remarks
The following safety notes refer mainly to the use of gearboxes. When using geared motors please refer to the safety notes for motors in the corresponding operation instruction.
Also take account of the additional safety notes in the individual sections of these operating instructions.

General
During and after operating geared motors, gearboxes and motors have live and rotating parts as well as possibly hot surfaces. All works to transport, stocking, connection, start up, repair and maintenance may only be performed by qualified personnel under strict consideration of

- these instructions and terminal diagrams
- warning and instruction labels on gearboxes/geared motors
- system-specific regulations and requirements
- national/regional regulations for safety

Severe damages on persons and equipment may result from

- inexpert application
- false installation or use
- not allowed removal of necessary protection covers or housing

2.2 Designated use

These gearboxes / geared motors are intended for industrial systems, they correspond to applicable standards and regulations and meet the requirements of directive 94/9EC (Atex 100a).
Technical data and information to applicable regulations are listed on the nameplate and in the documentation. All instructions must be strictly observed!

2.3 Transport

Please check all shipments immediately upon receipt for possible damaged in transport. Announce these without delay to the forwarding agent. Start up has to be postponed if necessary. Fix screwed transport rings. They are only designed for the weight of the gearbox / geared motor, no additional load must be added. Build in ring screws correspond to DIN 580. Loads and instructions contained therein have to be observed strictly. When two transport rings or ring screws are fixed, transport has to be executed on both transport rings. Direction of draw angle may not exceed 45° according to DIN 580. If necessary use sufficient means of transport. If there are transport securities please remove before start-up.

2.4 Gearboxes with extended storage

Gearboxes with extended storage contain a typical, ready for use oil filling with oil. Please check oil level before start up.

For extended storage please observe stocking conditions as stated below:

package	Place where stored	Storage time
open	Under a roof and closed at constant temperature and humidity (5° -60%, <50% rel. humidity) No sudden changes of temperature and controlled ventilation with filter (free of dirt and dust). No aggressive damps and vibrations. Protect from insects.	2 years and more with regular inspections. Check if clean and mechanical damages. Check if corrosion protection is complete.

Packaging has to be done by experienced personnel with for the usage qualified packing material.

2.5 Installation

Please note information in chapters „installation“ and „Assembly/Dismantle“.

2.6 Start up

Check correct direction when not coupled (listen for unusual grinding noises when turning). For test running without driving elements protect feather .Do not turn off control and protection functions even for tests. When there are changes to regular use as there are rise of temperature, noise, vibrations) geared motor has to be stopped. search reason , if necessary contact REHFUSS.

2.7 Inspection / Maintenance

Note information in chapter „inspection / maintenance“!

3 Construction of gearbox

3.1 basic construction helical gear 1-step SR120 – SR160

version L,C,B,F,Z

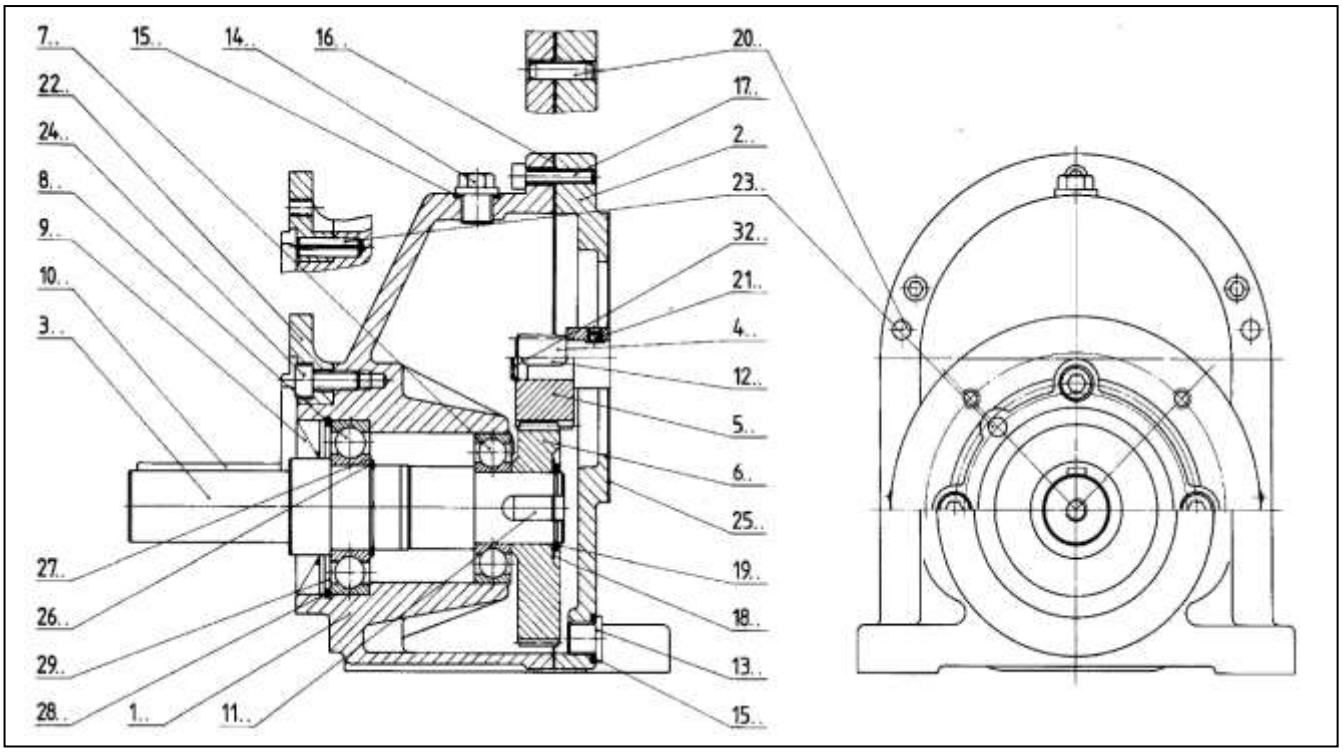

version R

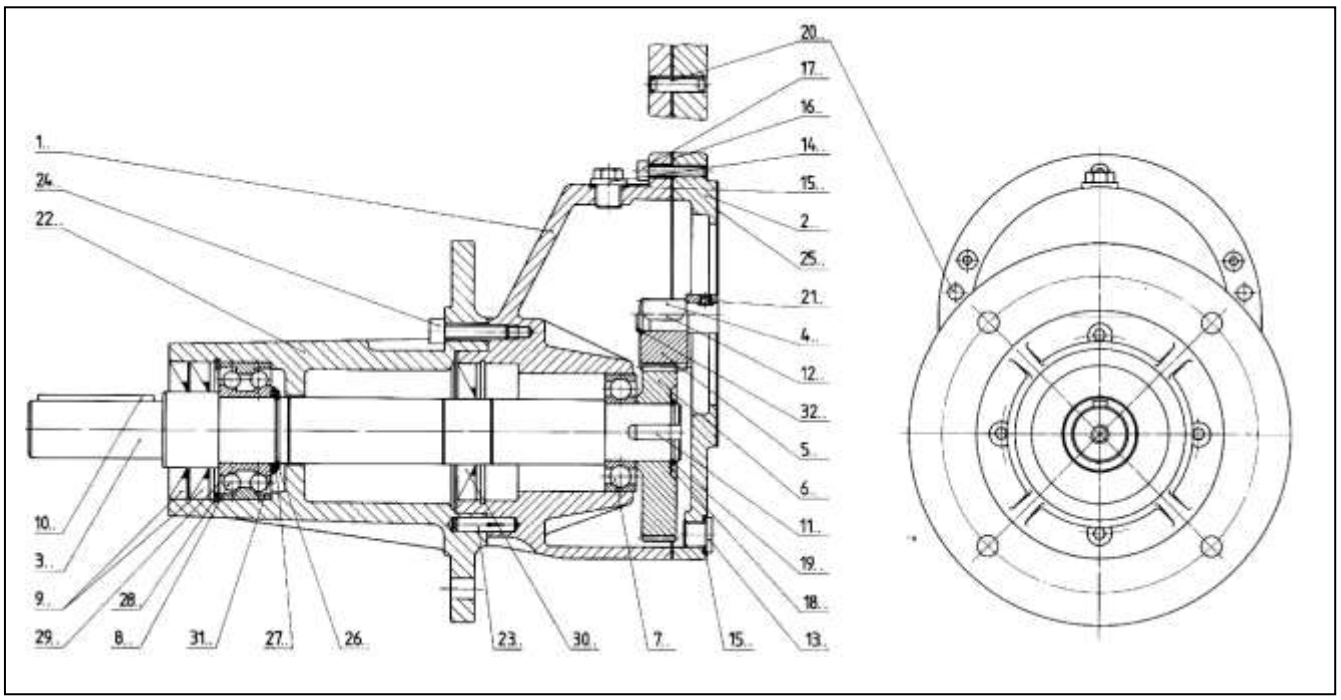

3.2 Basic construction helical gear 2 step SR210 – SR260

version L,C,B,F,Z

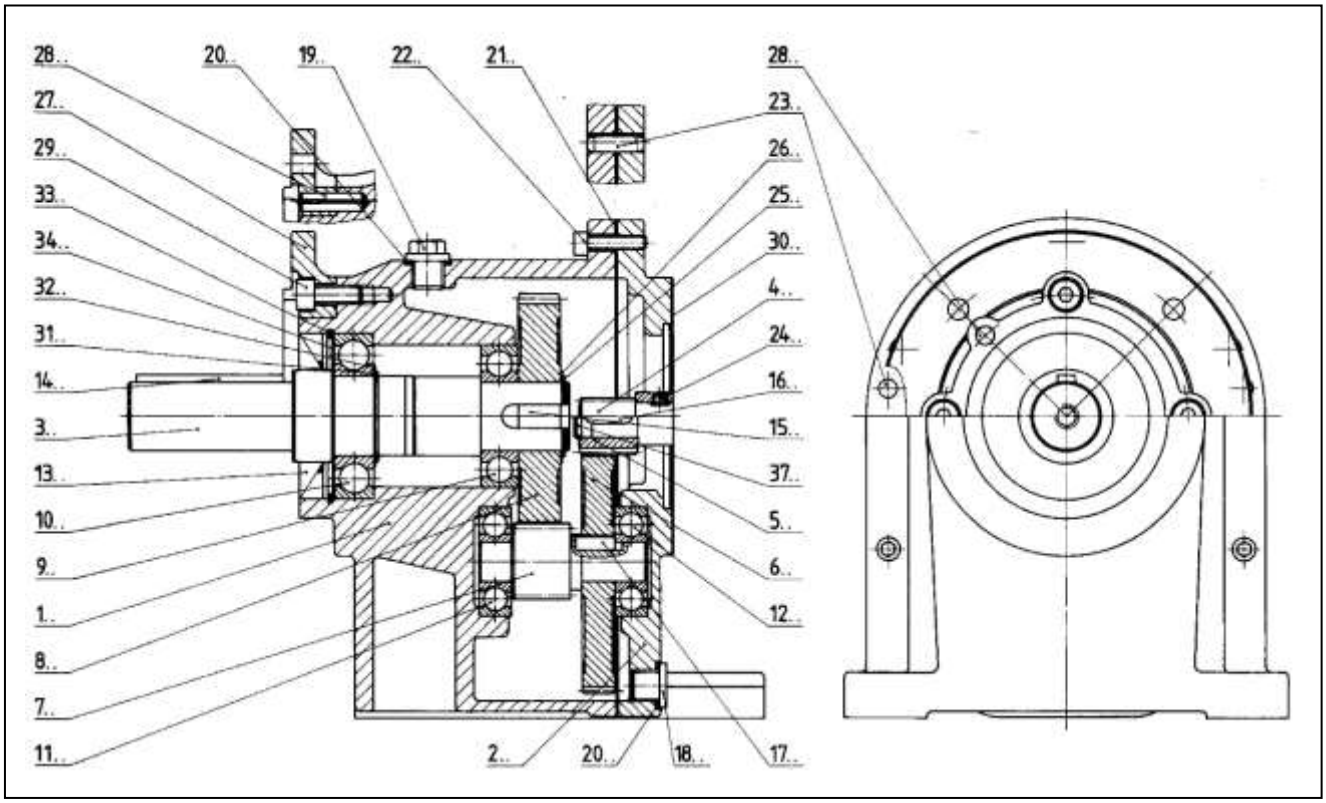

version R

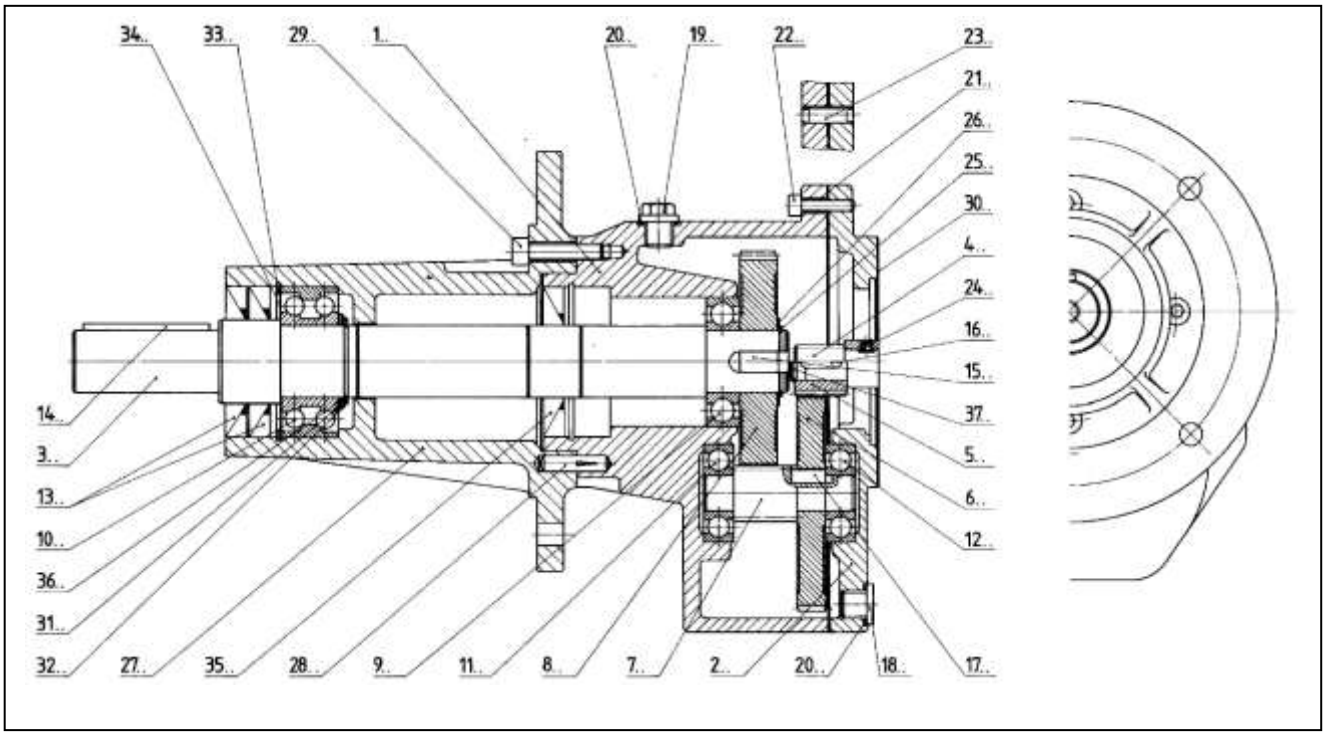

3.3 Basic construction helical gear 3-step SR320 – SR360

version L,C,B,F,Z

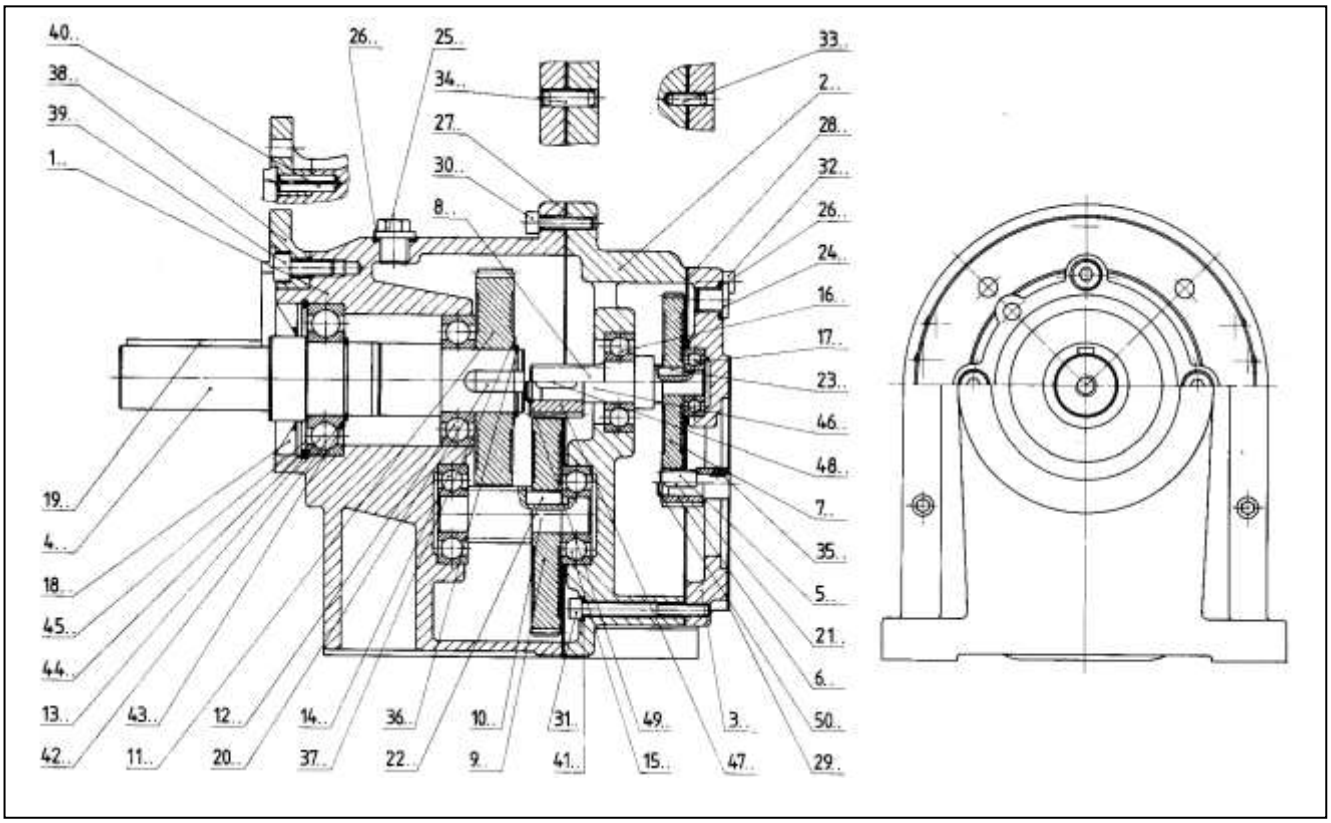

version R

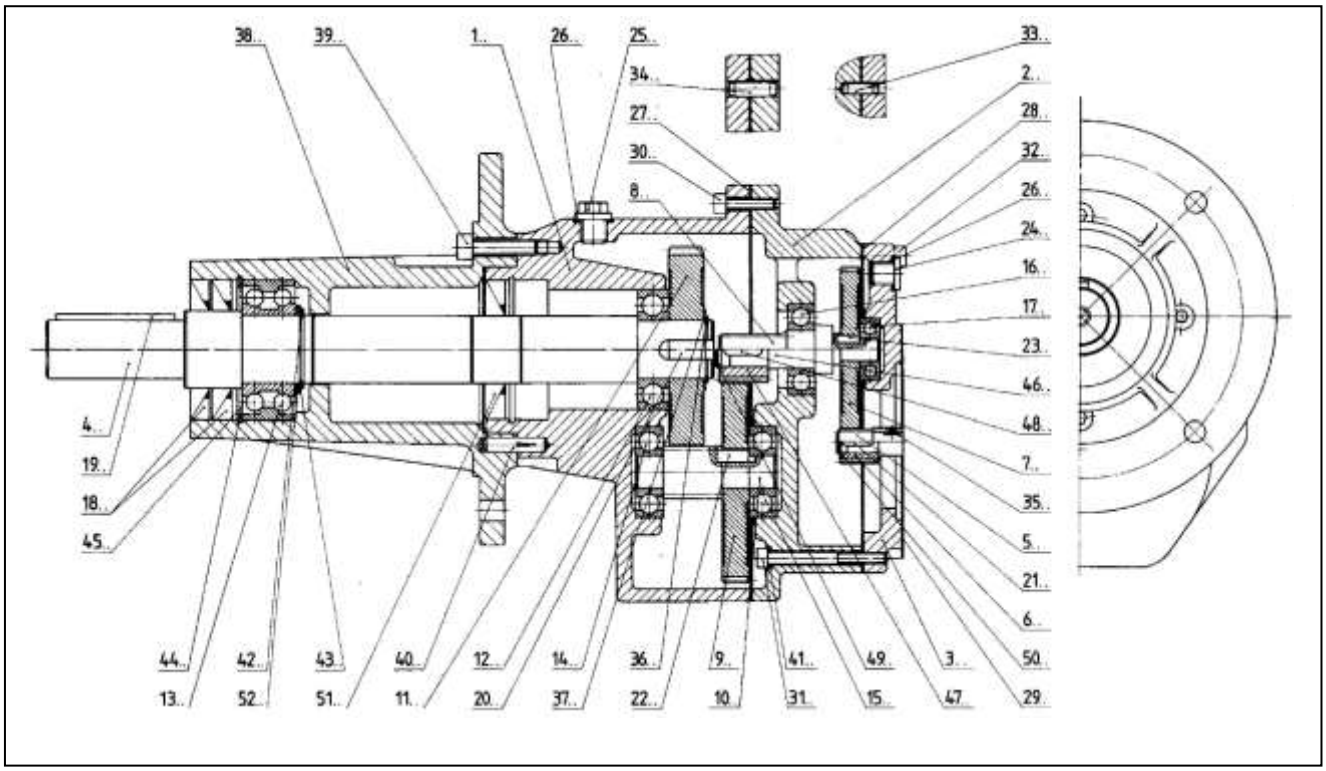

3.4 Basic construction helical gear SR270 – SR370

version L,B,F

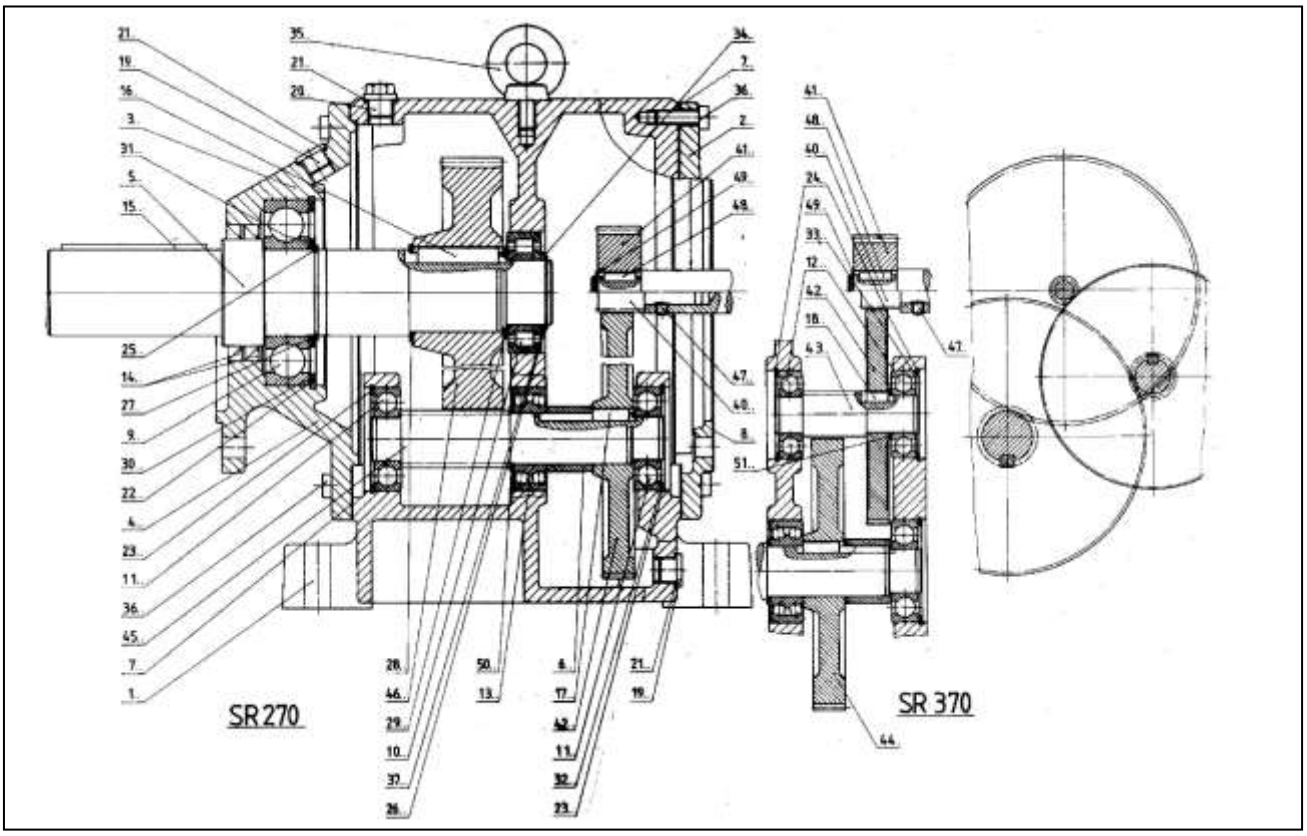

version R

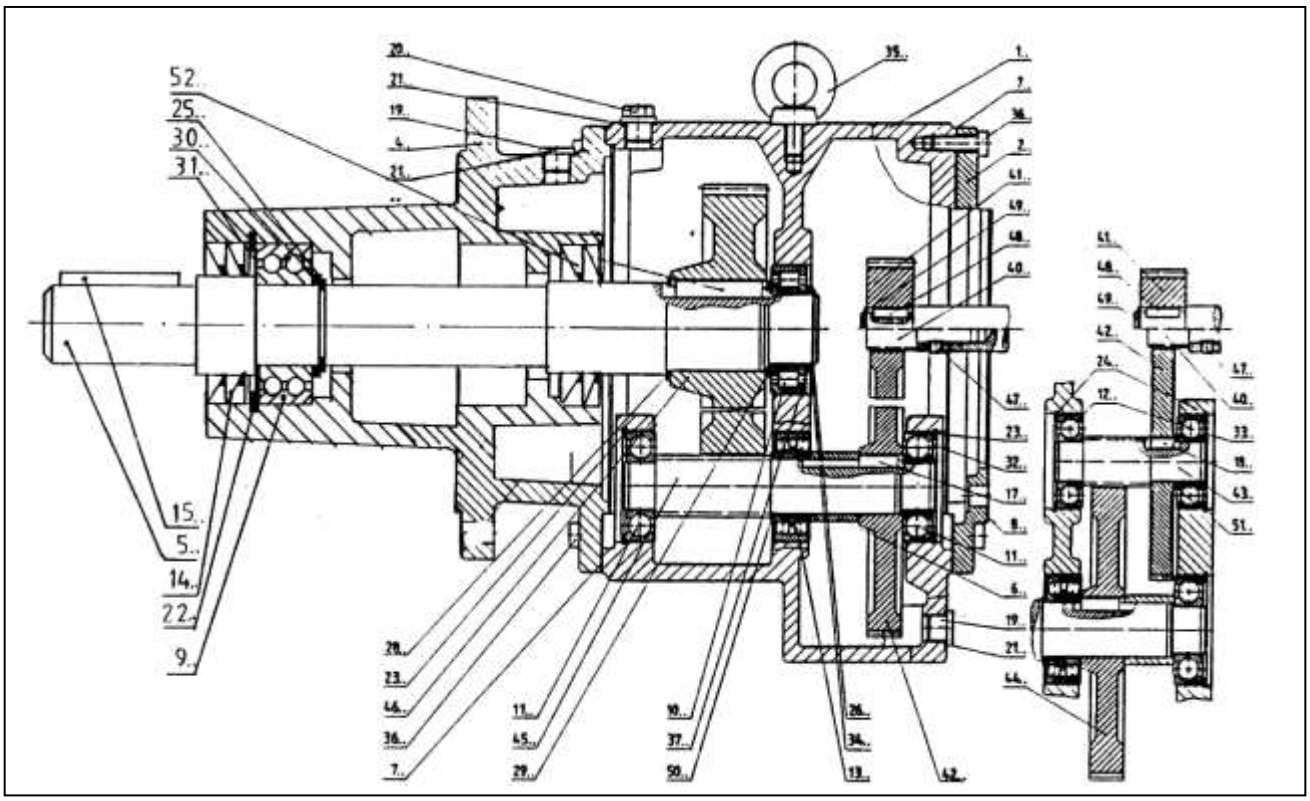

3.5 Basic construction shaft mounted gearboxes Type FG

version WG,WF,WU

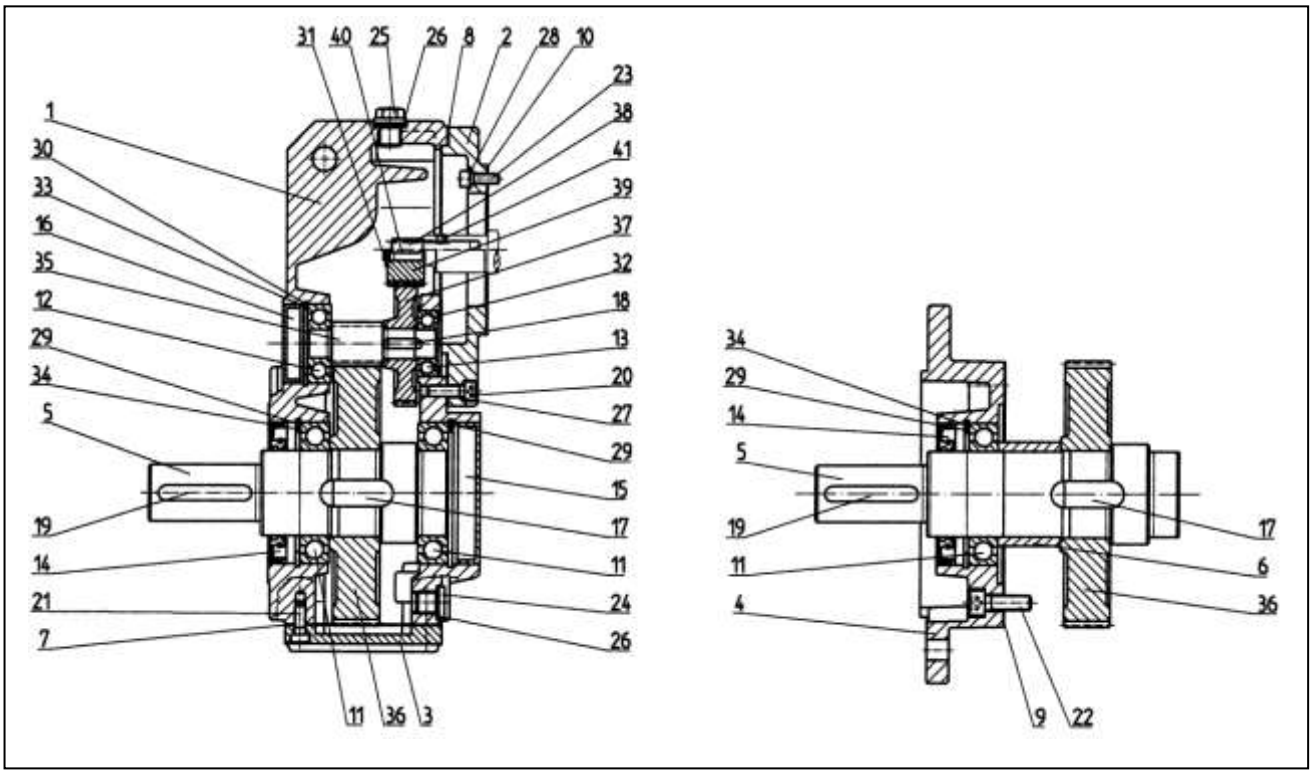

version HG, HF, HU

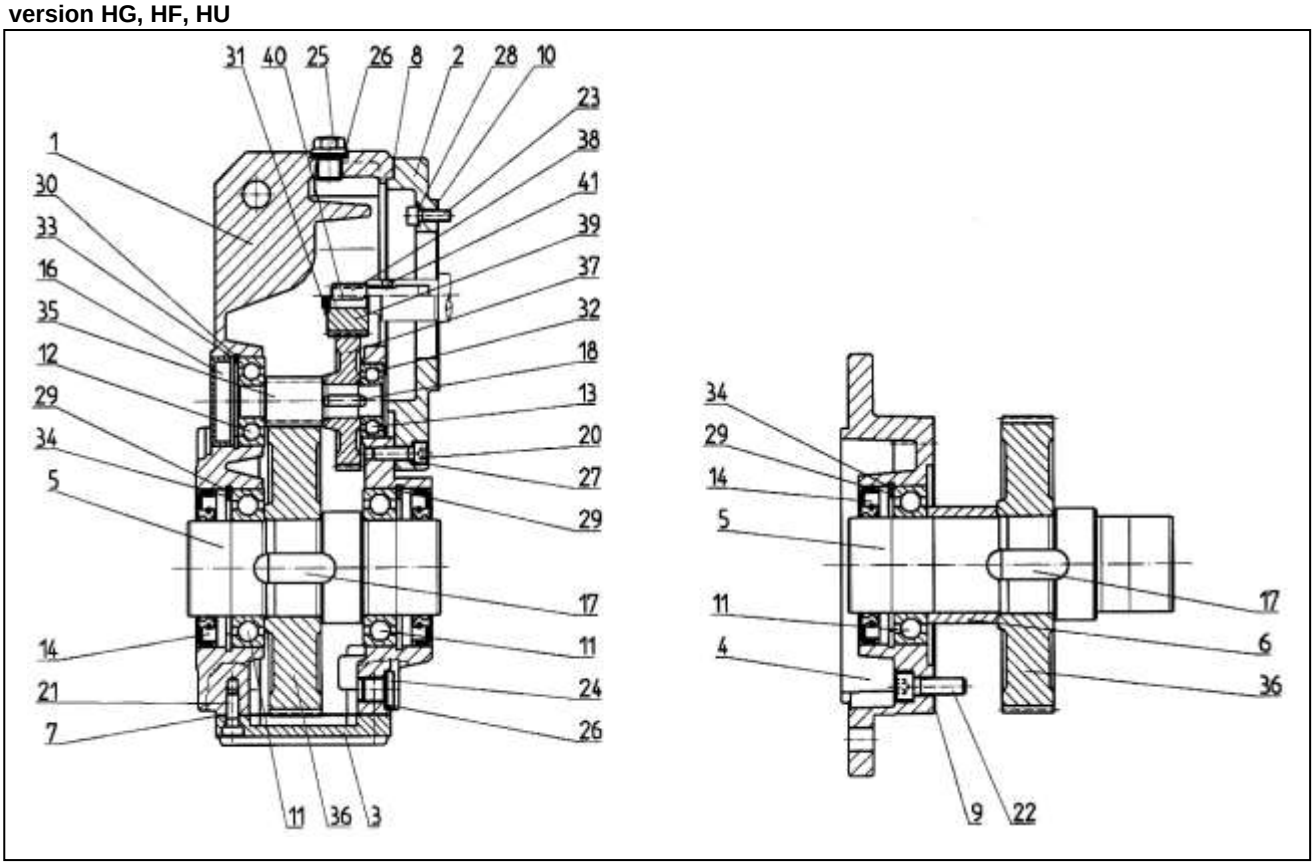

3.6 Basic construction worm gear box S030 – S050 IEC, K, KF

version WG,WF,WL,WD

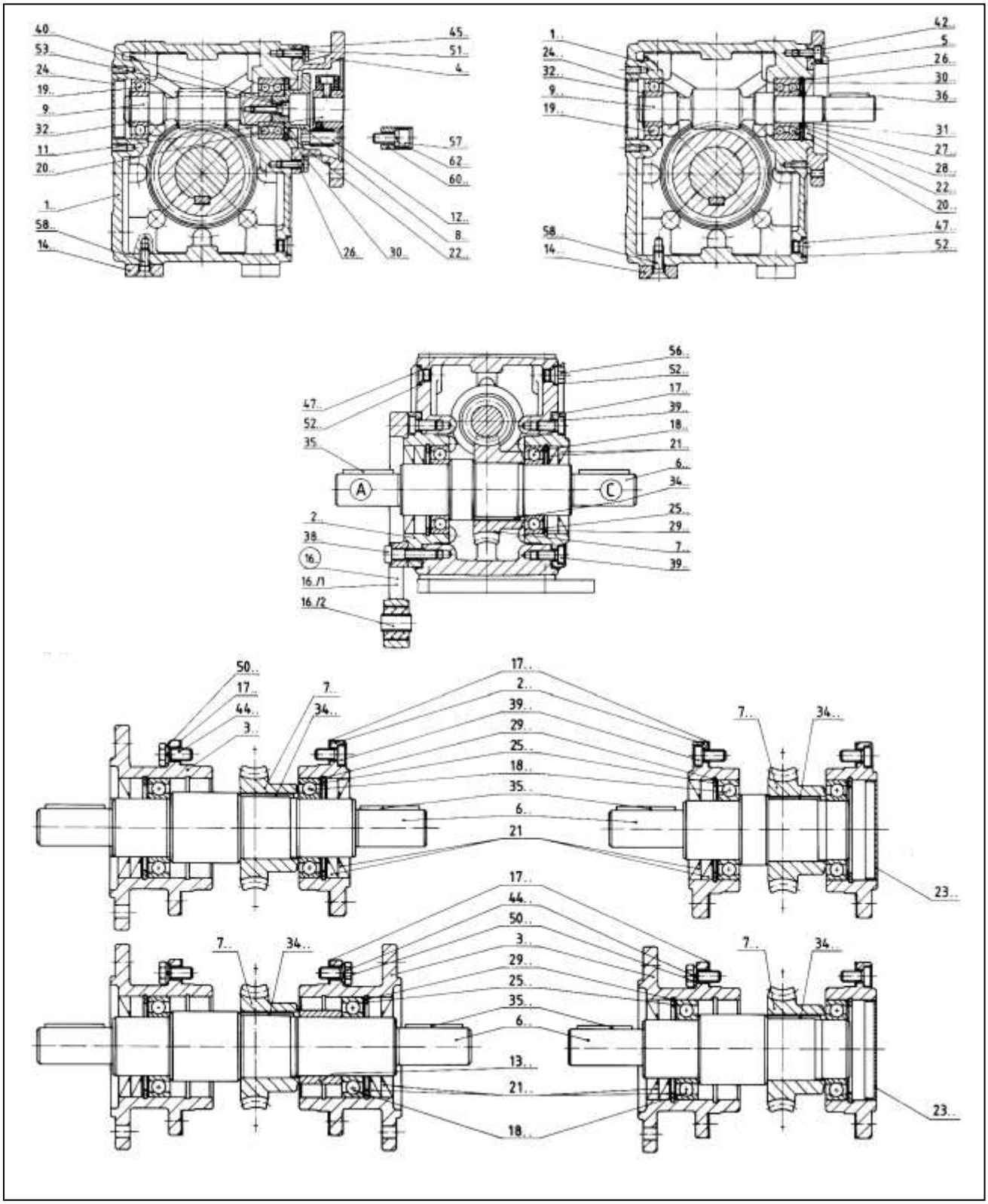

3.7 Basic construction worm gear box S030 – S050 IEC, K, KF

version HG,HF,HL,HD

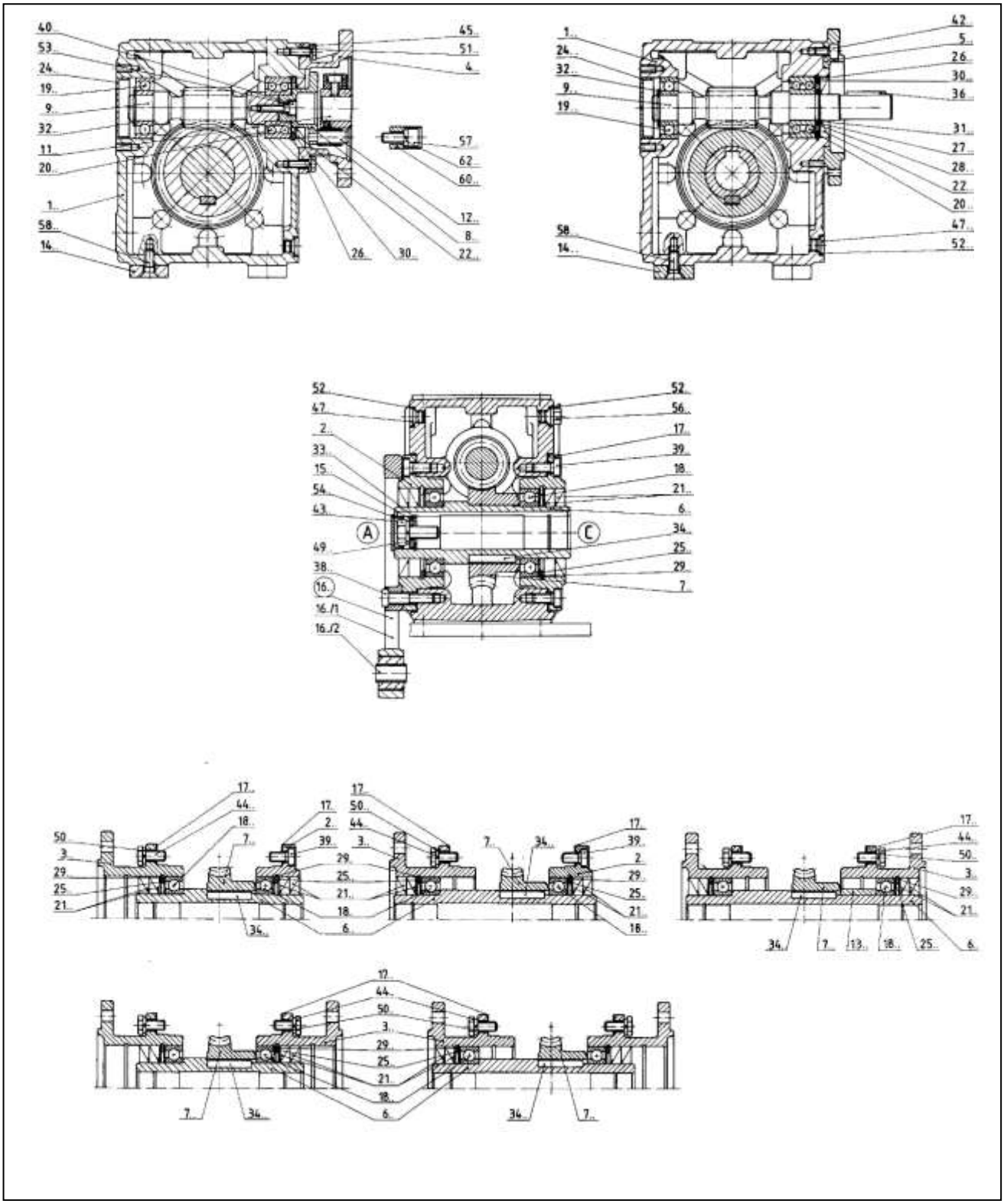

3.8 Basic construction helical worm gearbox SS130 – SS150

version WG,WF,WL,WD

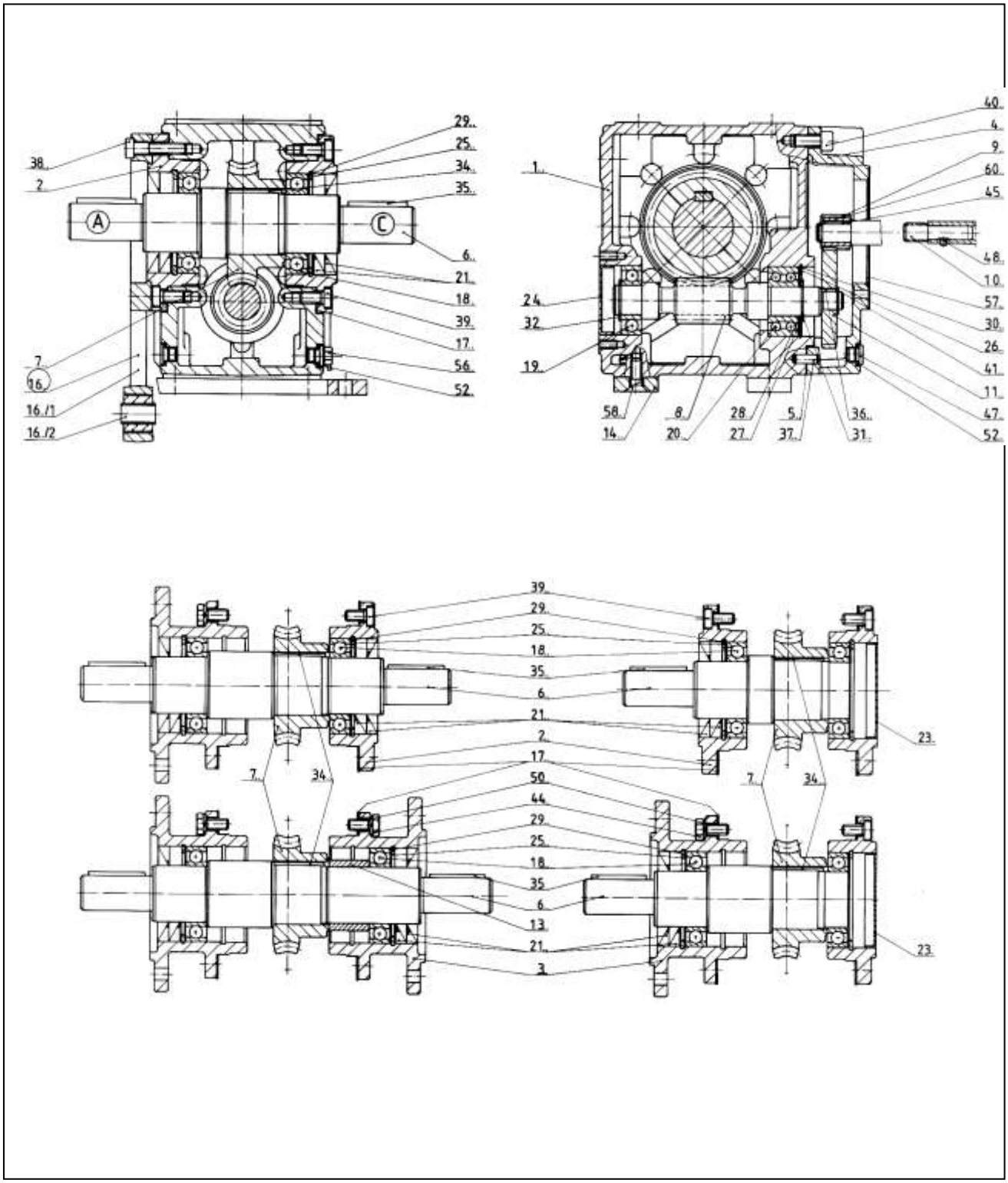

3.9 Basic construction helical worm gearbox SS130 – SS150

version HG,HF,HL,HD

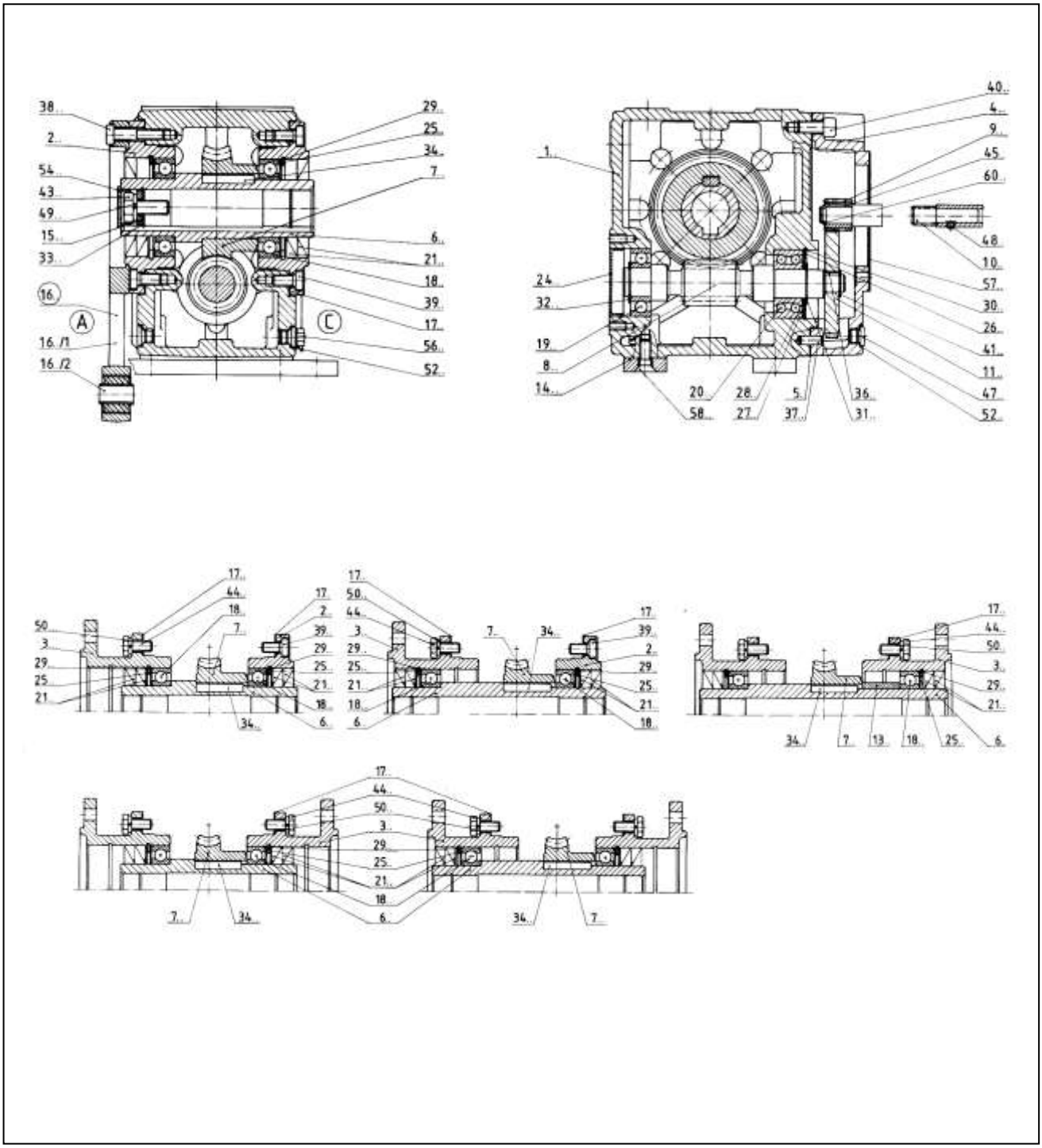

3.10 Basic construction helical worm gearbox SS160 - SS170

version WG,WF,WL,WD

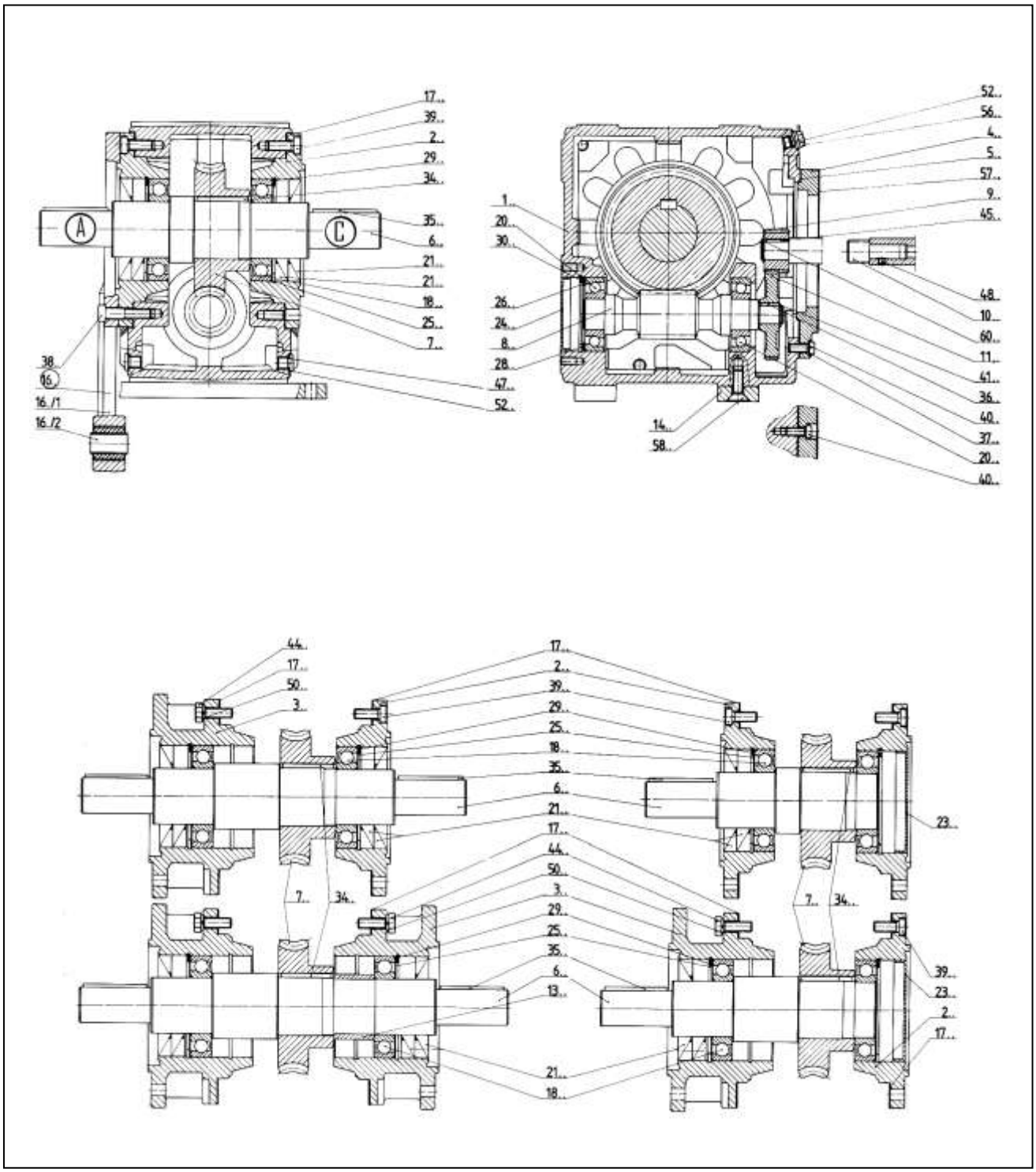

3.11 Basic construction helical worm gearbox SS160 - SS170

version HG,HF,HL,HD

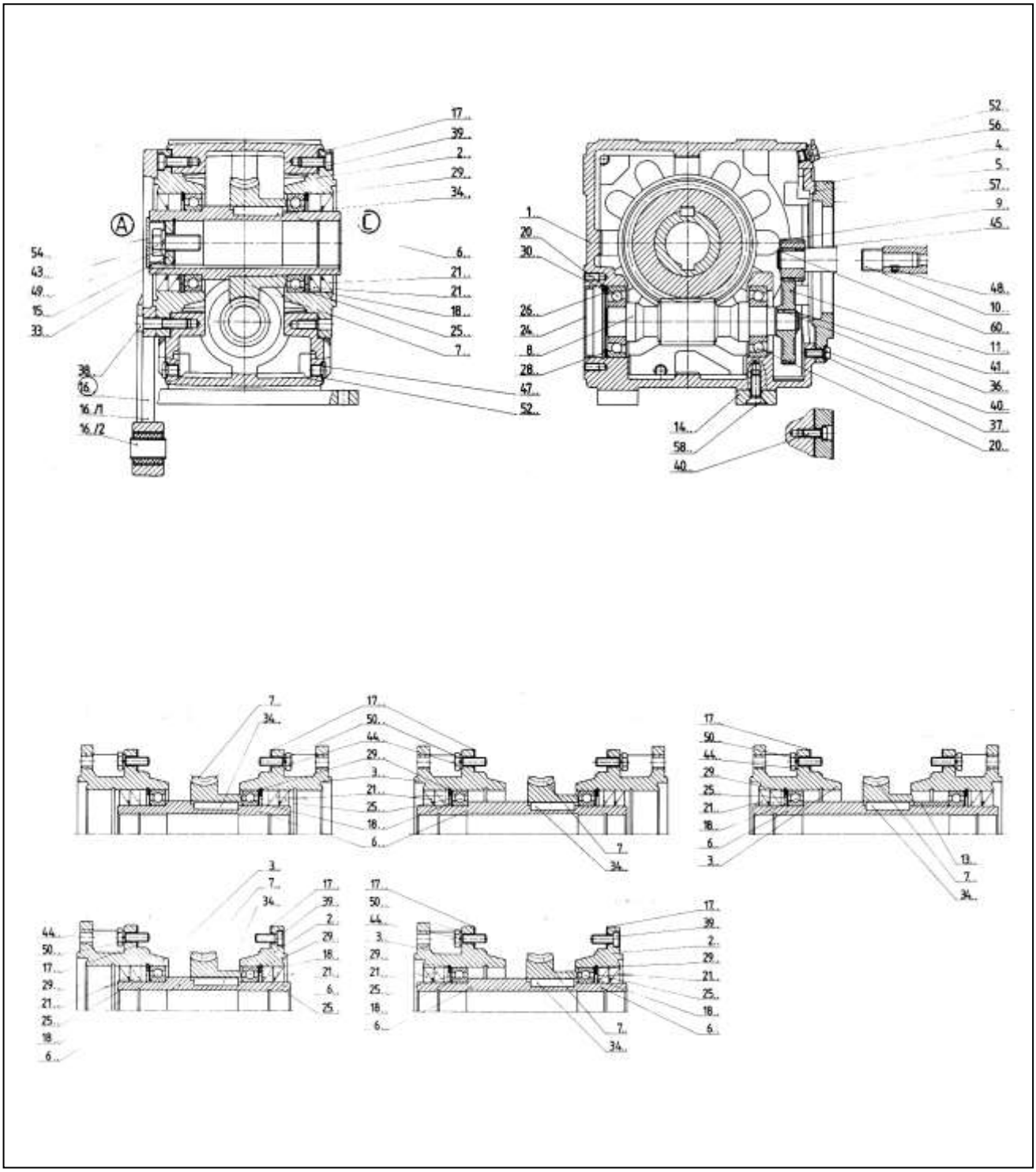

3.12 Basic construction worm gearbox SM011, SM(N)021, SM(N)031

version WG,WGU,WF,WFU

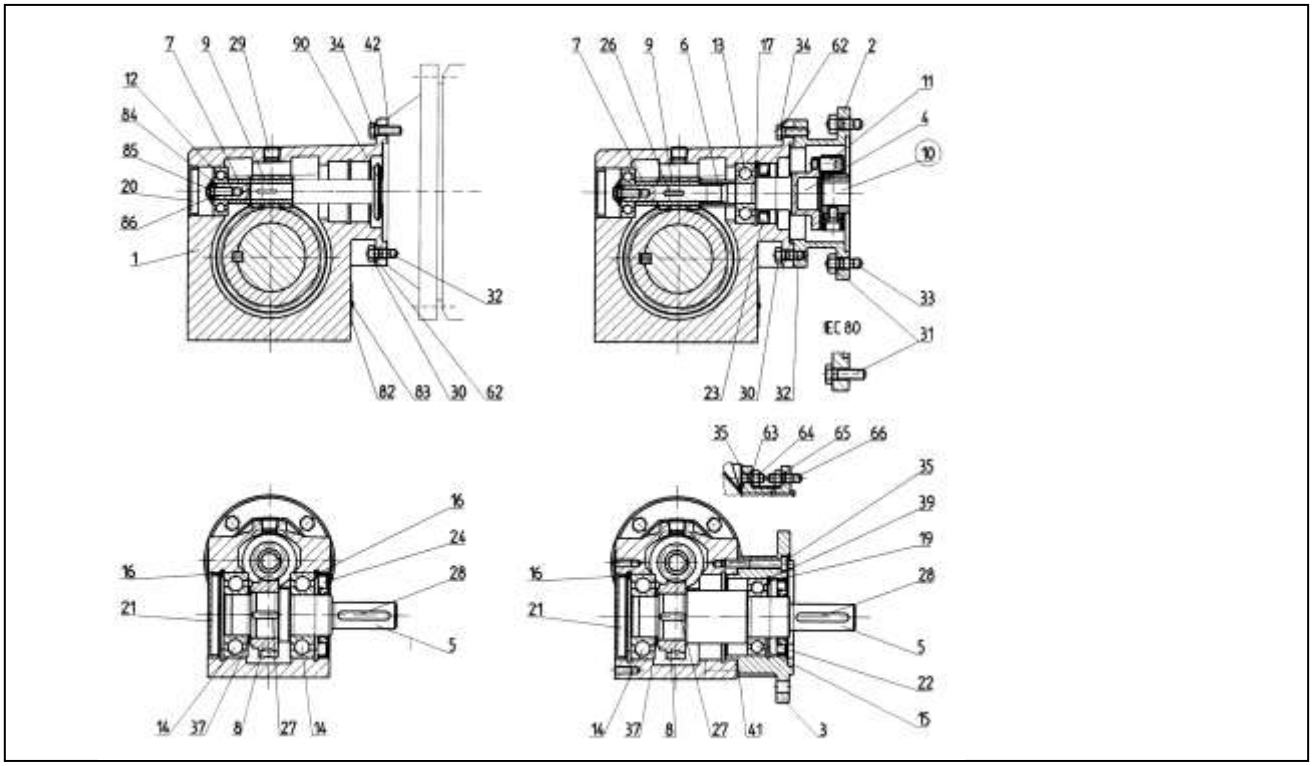

version HG,HGU,HF,HFU

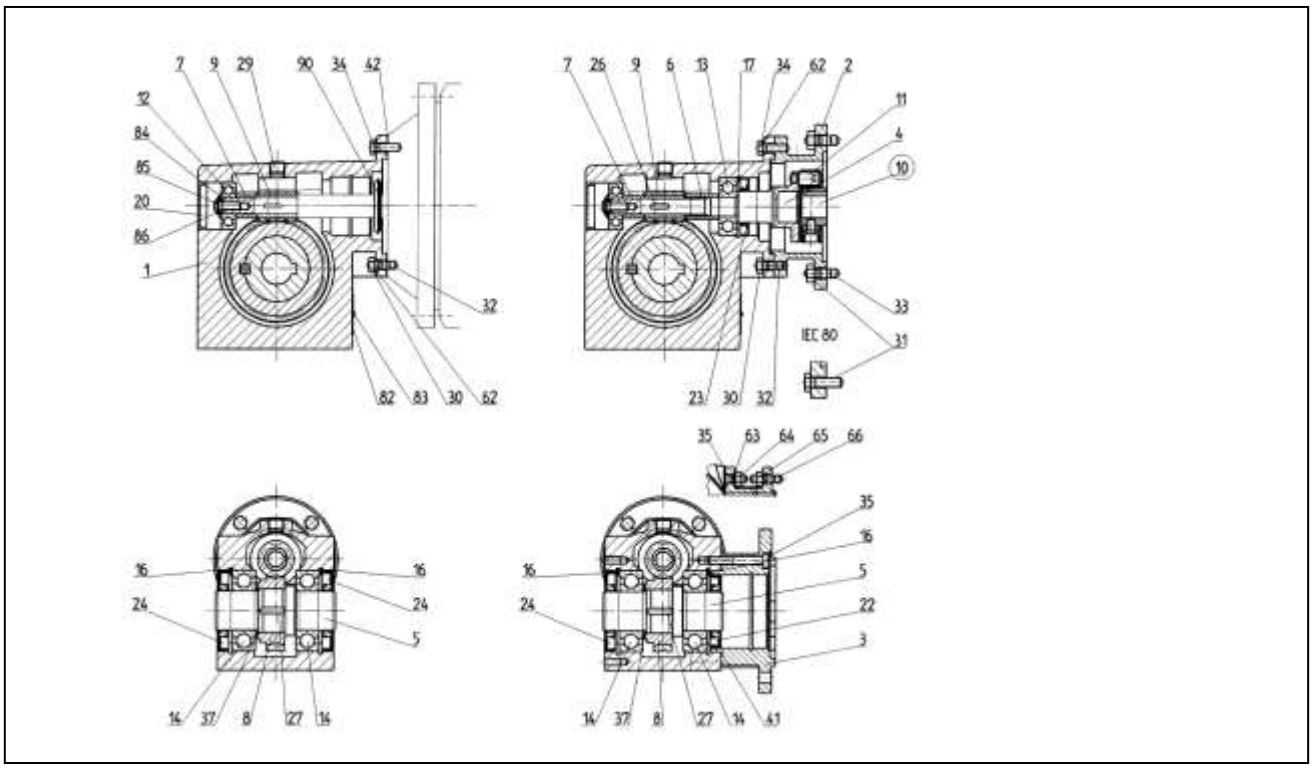

3.13 Basic construction worm gearbox SM041

version WG,WGU,WF,WFU

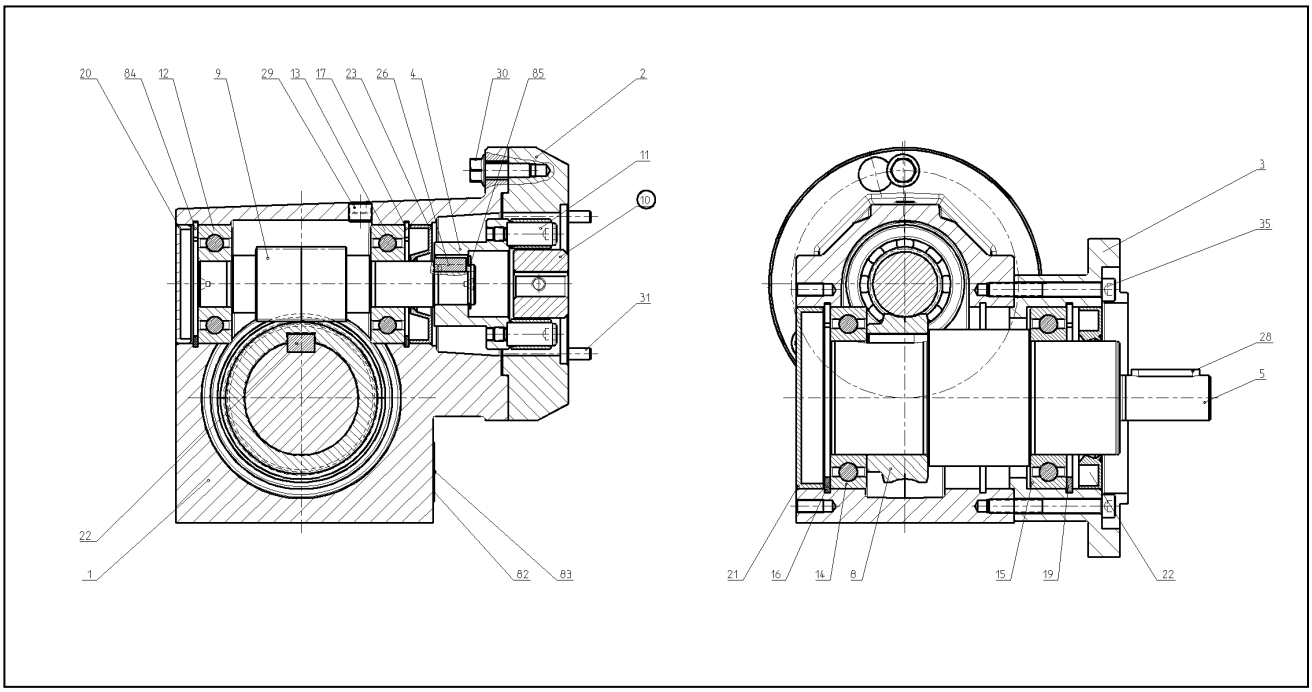

version HG,HGU,HF,HFU

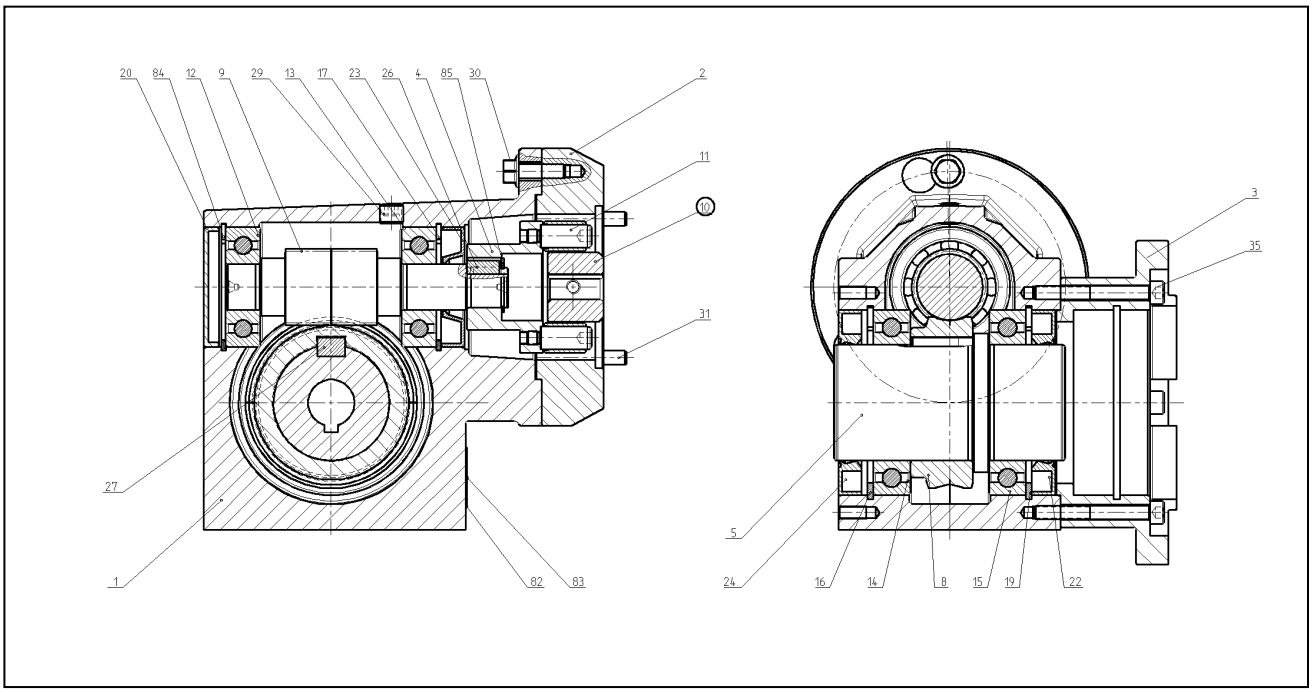

3.14 Basic construction worm gearbox SM(N)051 – SM061

version WG,WGU,WF,WFU

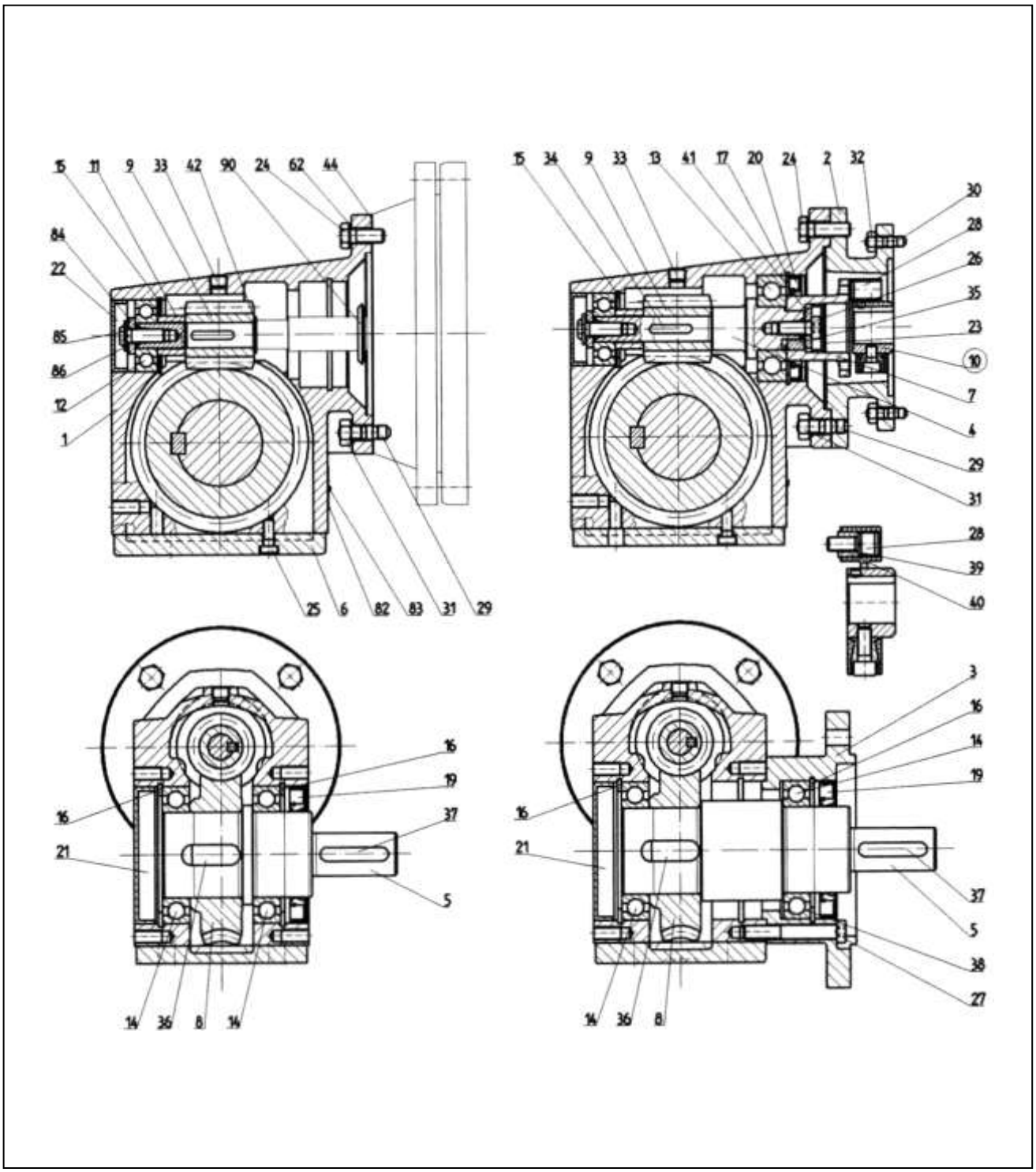

3.15 Basic construction worm gearbox SM(N)051 – SM061

version HG,HGU,HF,HFU

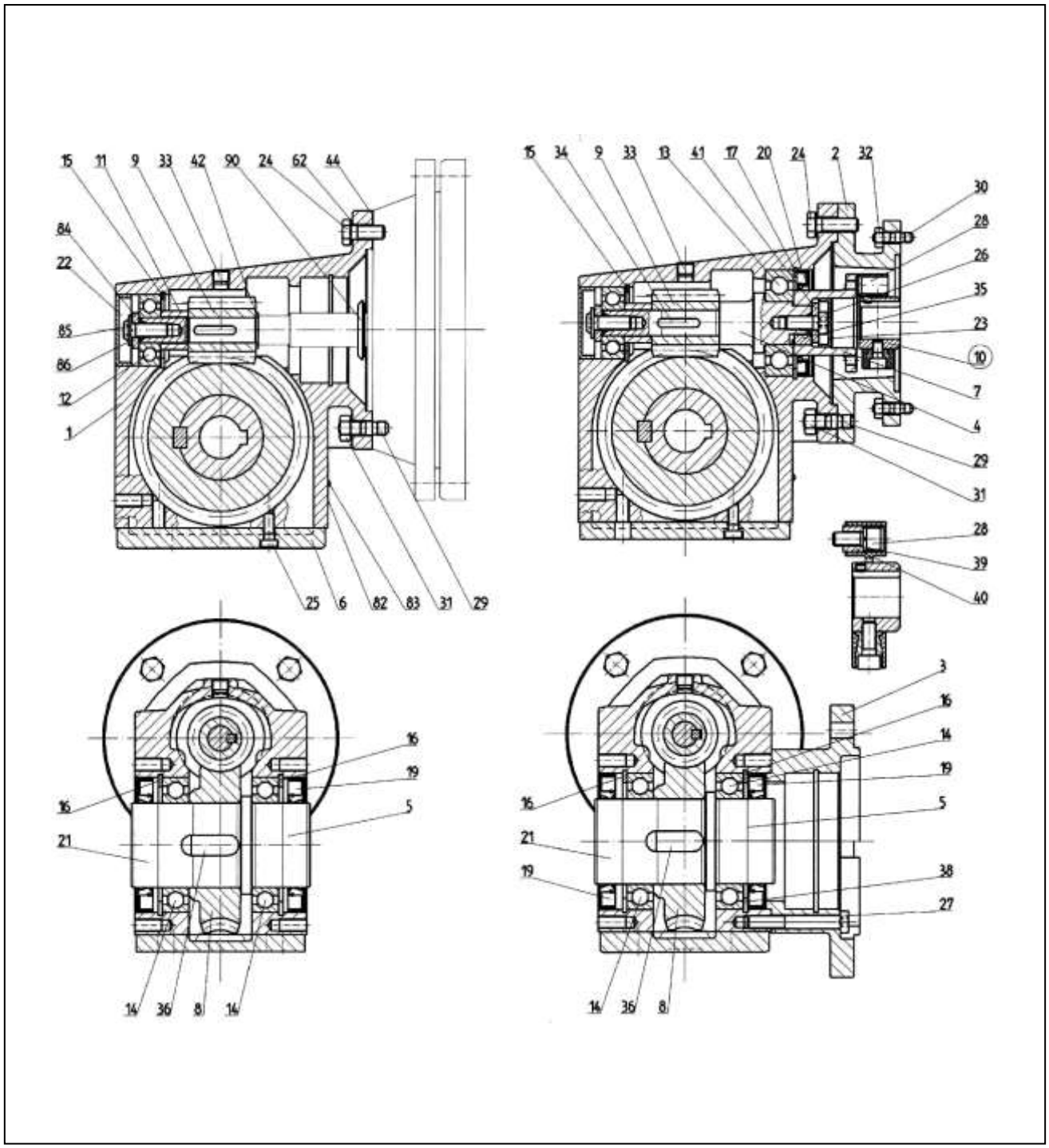

3.16 Basic construction worm gearbox SSM 121 – SSM131

version WG,WGU,WF,WFU - HG,HGU,HF,HFU

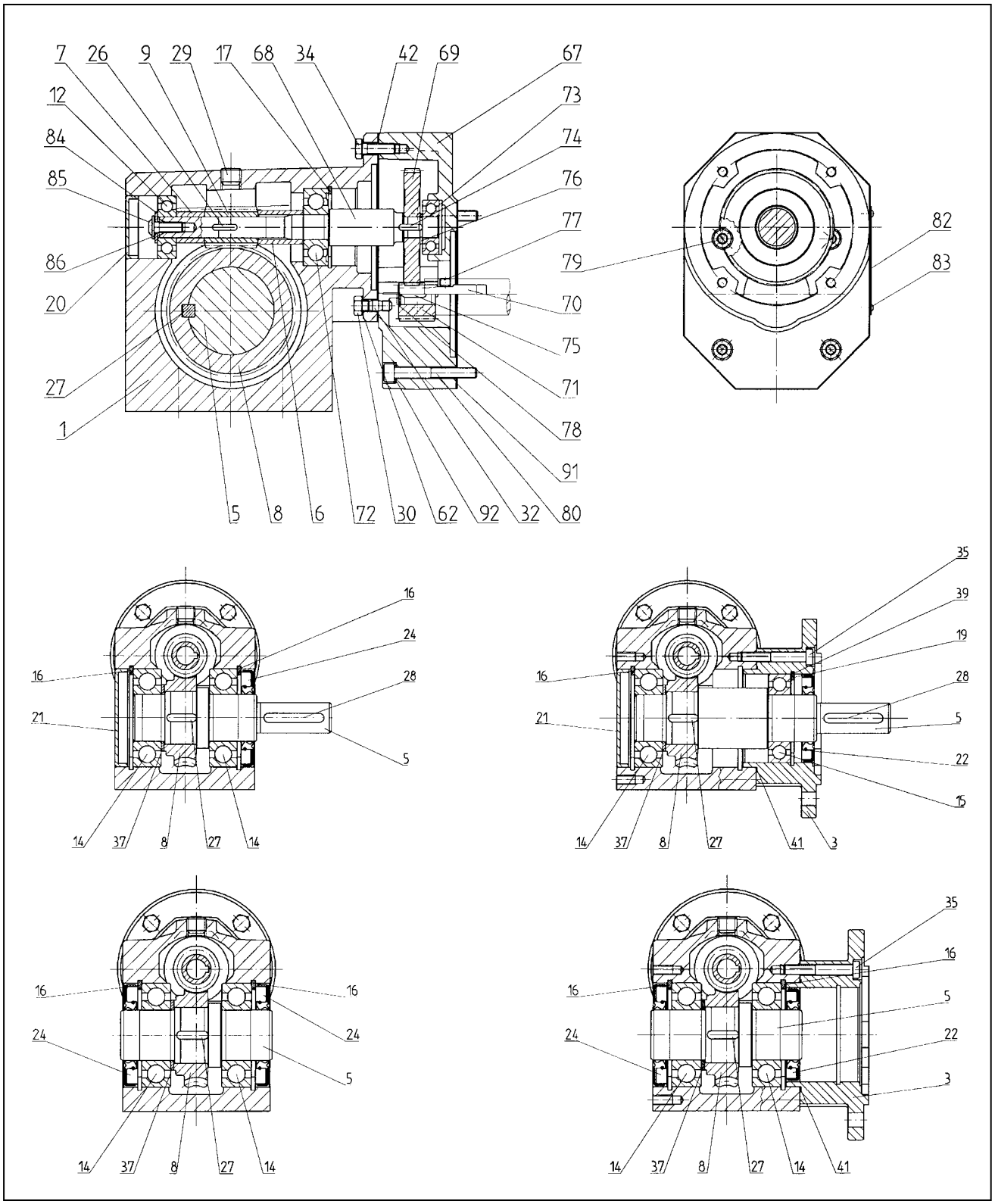

3.17 Basic construction worm gearbox SSM151 – SSM161

version WG,WGU,WF,WFU - HG,HGU,HF,HFU

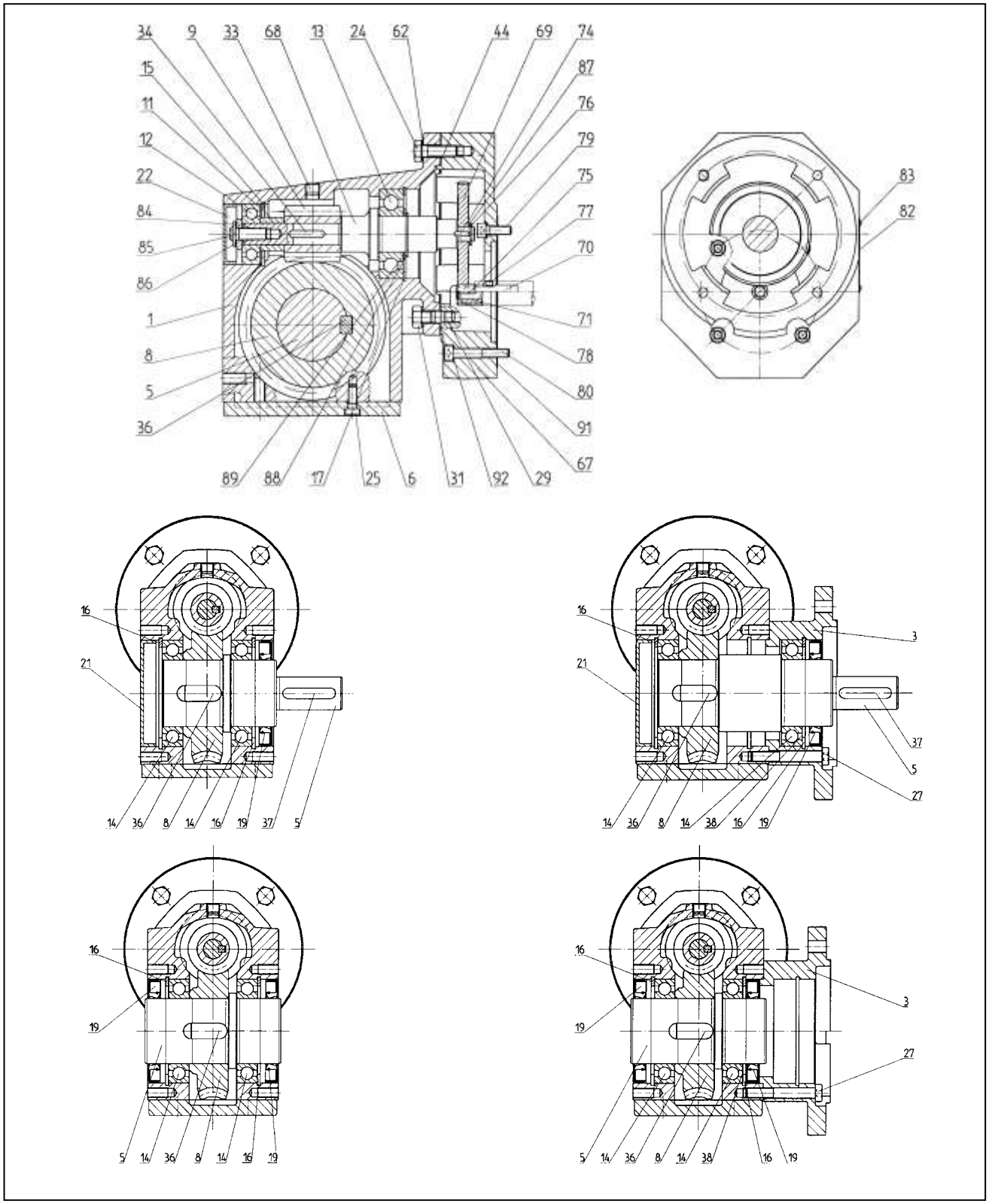

3.18 basic construction slip clutch

worm gearbox S, SS

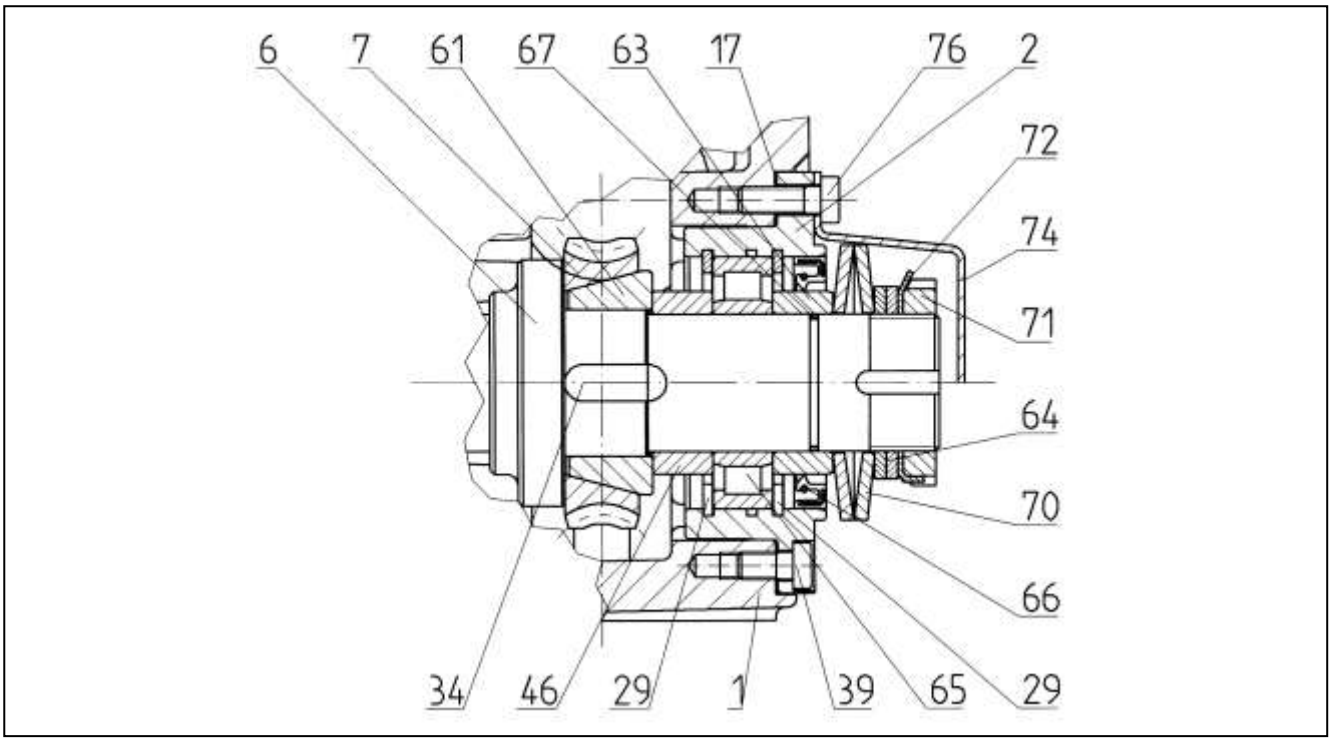

Worm gearbox SM, SSM

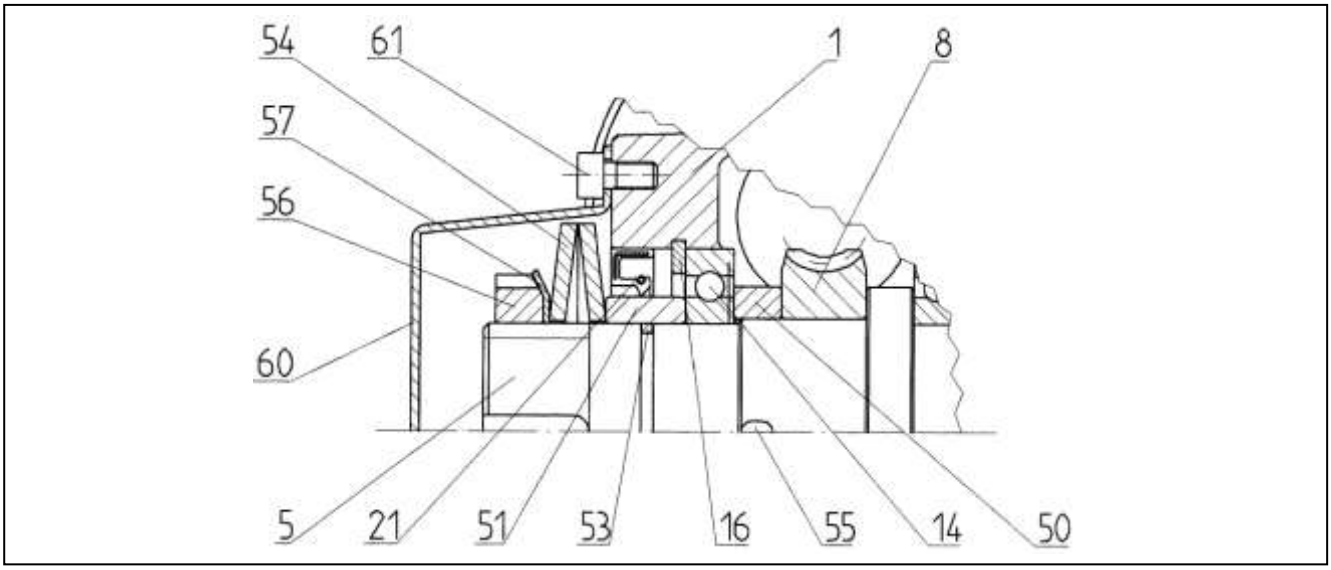

3.19 Basic construction IEC – Adapter

size 56 – 71

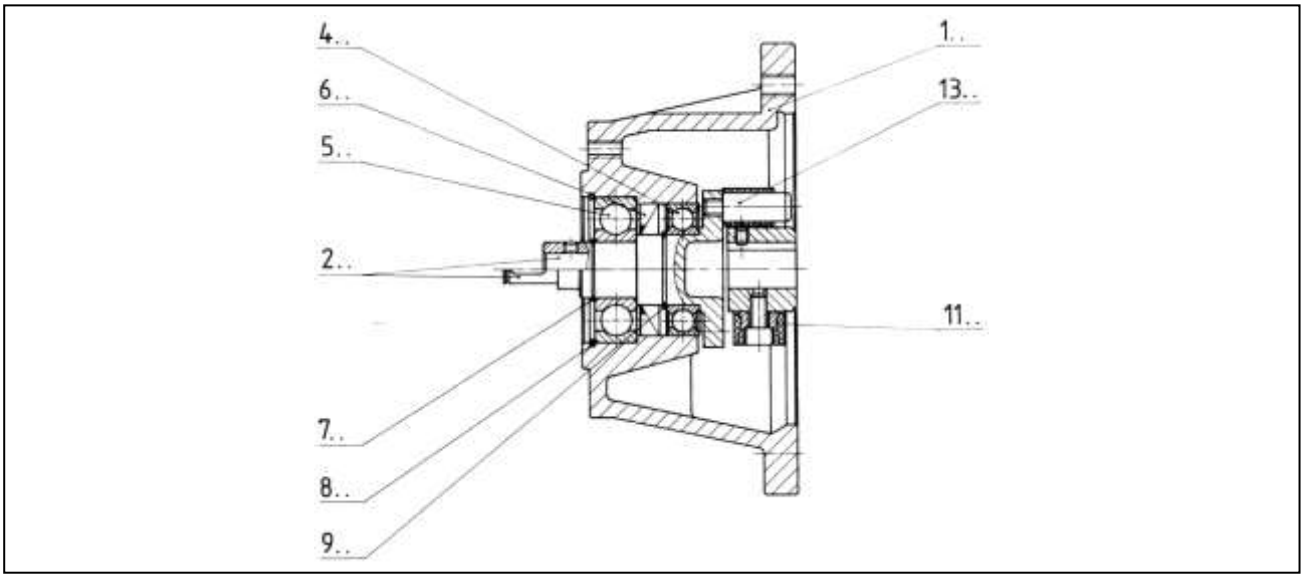

size 80 – 180

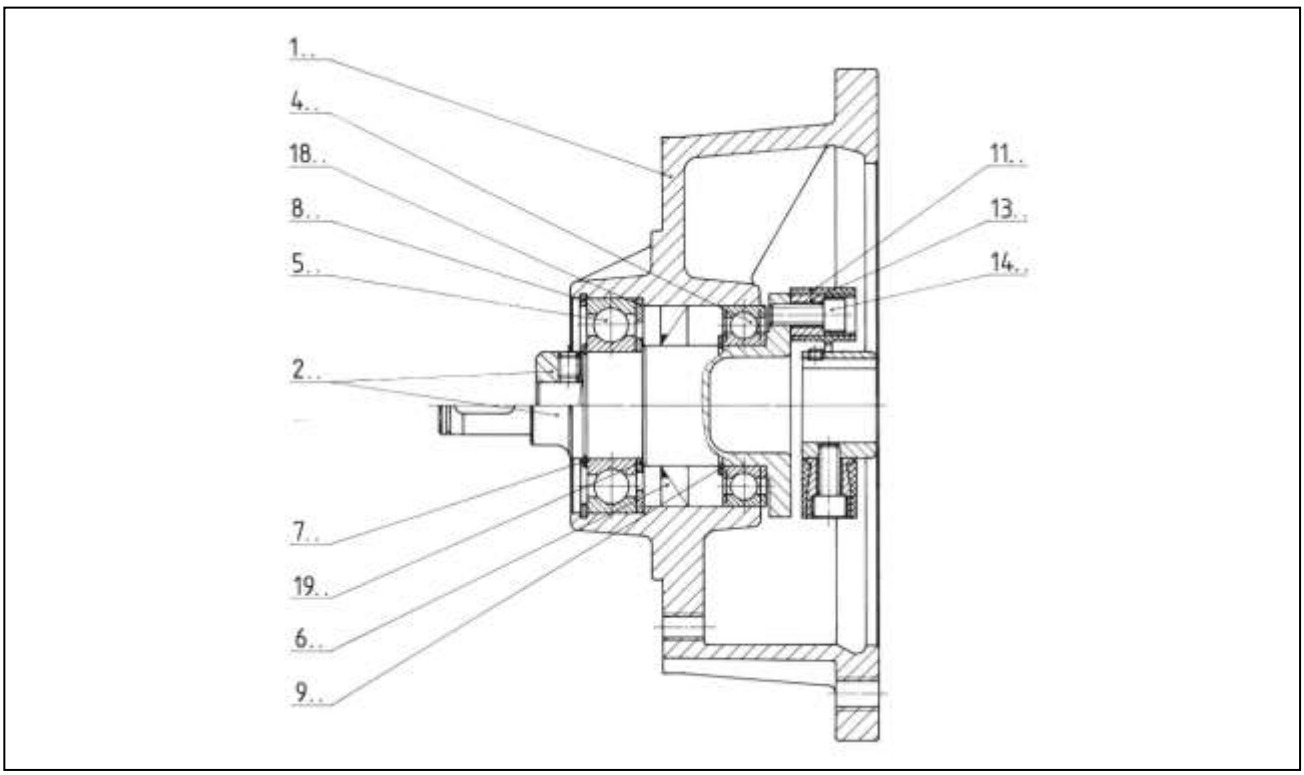

3.20 Basic construction free input shaft

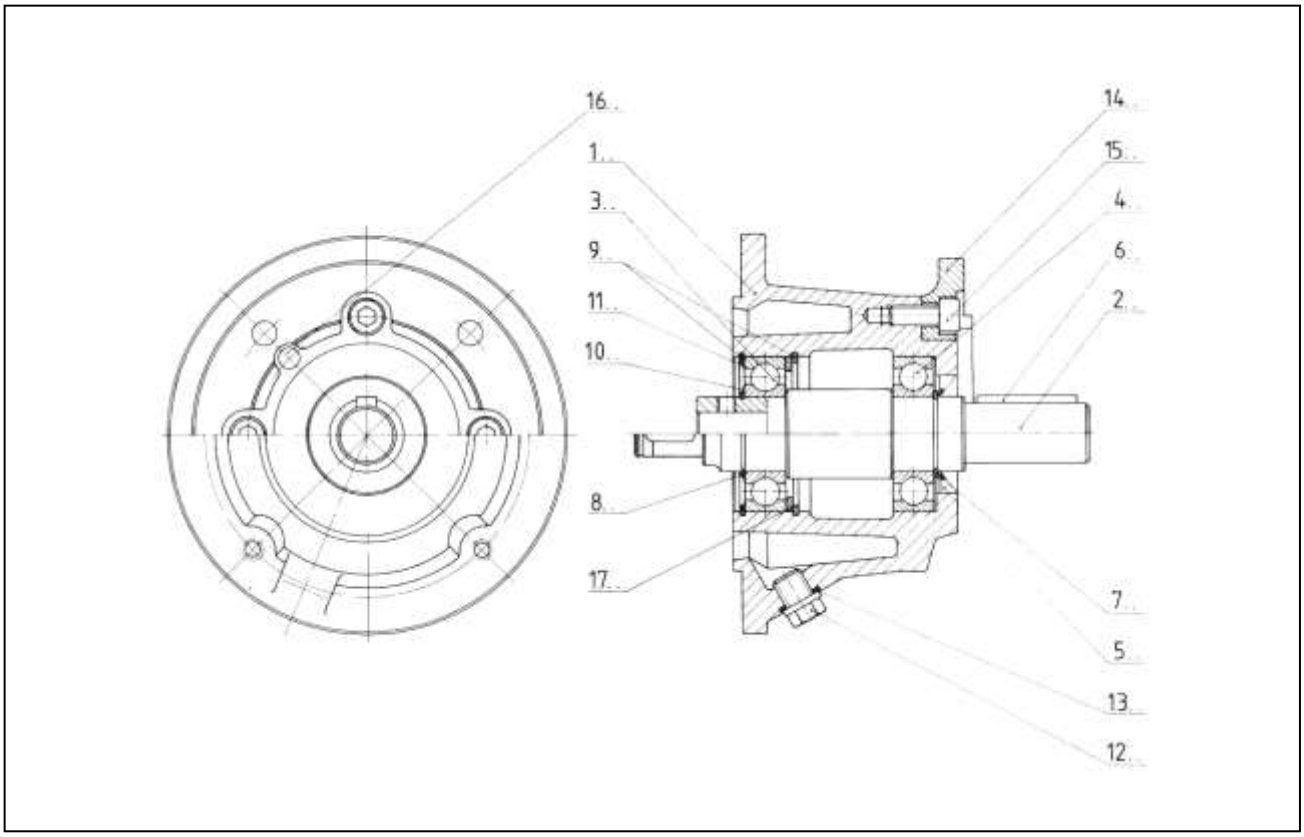

4 Mechanical Installation

4.1 required tools

- Wrench set
- torque wrench (for shrink discs)
- mounting press
- equalisation elements if needed (discs, distance rings)
- fixing material for input- output elements
- lubricant
- screw protection (for cover on input side with centring ring). z. B. Loctite
  all screws which had to be disengaged have to be secured again with screw protection (liquid or mechanical)

Tolerances at installation

Shaft end	flange
Tolerance on diameter according to DIN 748 ISO k6 at solid shaft < 50 mm ISO m6 at solid shaft > 50 mm ISO H7 at hollow shaft Centre bore according to DIN 332, Form D	Tolerance on centring according to DIN 42948 ISO j6 at b1 ≤ 230 mm

4.2 Before you start

The drive may only be installed if:

Information on nameplate of drive corresponds to the approved on site explosion application range (equipment group, category, zone, temperature class or maximum surface temperature)

The drive is not damaged (no damage resulting from shipping or storage)

The following requirements have been properly met:

There are no potentially explosive atmospheres, oils, acids, gases, vapours, radiation etc. during installation.

For standard drives: ambient temperature –5°C - +40°C

For worm gearboxes: there is no extern mass moment of inertia which might drive back gearbox on load
[at η' (back driving) = 2 - 1/η < 0,5 retained by friction].

4.3 Preparation

Output shafts and flanges must be completely free of anti-corrosion agents, contamination or other impurities (use a commercially available solvent) Do not let solvent get in contact with the sealing lips of the oil seals – danger of damage of the material.

4.4 Installation of gearbox

The gearbox or geared motor may be mounted or installed in the specified position (SM(N)/SSM gearbox are position independent) only on a level, vibration free or torsionally rigid support structure. Do not tighten housing legs and mounting flanges against each other.

For mounting of geared motors use screws in quality 8.8 only!

Oil control and drain screws must be easily accessible!
When mounting customer's parts protection class has to be maintained!

Before starting check specified lubricate quantity! (Chapter "Lubricant" – information on nameplate)

We deliver gears with necessary lubricant quantity. Slight deviation is possible and allowed within tolerance. Check oillevel before starting (-> chapter "Inspection / Maintenance").

Alter design only after prior agreement with Rehfuss.

Use plastic inserts when there is danger of electrochemical corrosion between gear and machine (connection of mixed materials as cast/steel). Use plastic inserts 2-3 mm thick. Use plastic washers for screws! Plastic used must have bleeder resistor of < 10^9 Ω. Ground gear housings on principle. For geared motors use additionally grounding screws on motor. Ensure adequate supply of cooling air and that heated air from other units is not drawn in. The cooling air may not exceed a temperature of 40°C. No metal parts must be mounted isolated.

Installation in damp areas or in the open
Drives might be supplied in corrosion-resistant versions for use in damp areas or in the open. Any damages to the paintwork (e.g. on the breather valve) must be repaired.

Ventilation of gearboxes
No ventilation necessary for below gearboxes:
SM(N)/SSM –gearboxes
All remaining gears are supplied by Rehfuss with adequate and activated breather valves.
Exception:
Gearboxes for extended storage and when mounted on sloping level are supplied with protection cap on breather bore.
Before starting user has to change supplied breather valve against sealing plug in the highest position.
For geared motors for extended storage and for mounting in sloping level supplied breather valve finds in Terminal Box of motor.
Gearboxes in closed design are supplied without breather valve.
Breather valves are activated ex works normally.

Painting the gear unit
If the drive will be over painted or partially repainted, ensure that the breather valve and oil seals are carefully covered with tape. Remove tape strips after the paint work is finished.
Seals must be compatible!

4.5 Gears with solid shaft

Mounting of Input and output components
The figure below shows an example of a mounting device for mounting clutches or hubs onto shaft ends of gear units or motors. Where required, the thrust bearing on the mounting device can be removed.

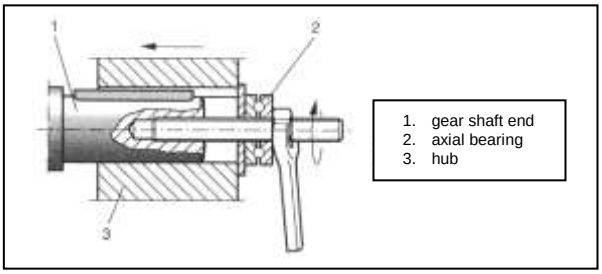

The following figure shows the correct mounting arrangement B of a gear or sprocket to avoid excessive overhangs loaded.

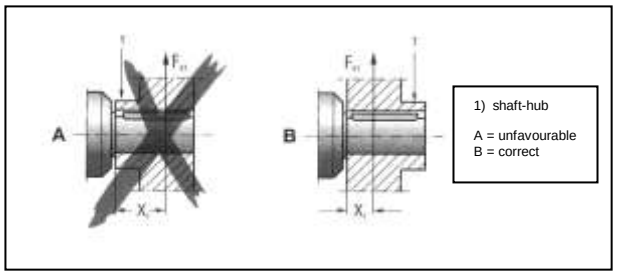

.

Only use a mounting device for installing input and output-elements. Use the centre bore and the thread on the shaft end for positioning purposes.

Never mount belt pulleys, clutches, pinions etc. onto the shaft end by hitting them with a hammer (damage to bearings, housing and the shaft!).

Observe correct tension of the belt for belt pulleys (in accordance with manufacturer's specifications).

Power transmission elements should be balanced after installation and must not rise to excessive radial or axial forces (see the "Gearmotors" catalogue for approved values).

Assembly is easier if you first apply lubricant to the output element or heat it up briefly (to 80-100°C).

Mounting of couplings
The following items have to be balanced according to the coupling manufacturer's specifications when mounting couplings:
a) Maximum and minimum clearance
b) Axial offset
c) angular offset

Input and output elements such as belt pulleys, clutches etc. must be equipped with a touch guard!

4.6 Mounting torque arm

do not stain when mounting!
Support jack on both sides.

4.7 Mounting/Dismantling on Shaft gearboxes with hollow shaft

Please refer for design of user's shaft Construction information in catalogue!

Mounting is easier when using a mounting device..

For axial safety of shaft Option „Fixing elements" may be used.

To avoid corrosion we recommend to turn free user's shaft between the 2 bearing surfaces!

Dismantling only with appropriate device.

Only mount / dismantle drives with appropriate device. Hitting on drives or shafts might damage bearings, housings or shafts).

4.8 Mounting/Dismantling of Shaft gears with shrink discs and cowl

Do not tighten clamping screw when shaft is not fixed! Hollow shaft might deform.
Clamping area of shrink disc must be free from any grease!

Assembly
1. loosen clamping screws slightly (do not remove entirely!).
2. carefully lubricate hollow shaft boring and Input shaft.
3. join degreased hollow shaft/Input shaft.

Assemble input shaft, note parallel position of outer rings of shrink discs. For housing with shaft collar fix shrink disc with bearing of 1 to 2 mm to housing of gearbox. Tighten clamping screws in a row (not crossing) with torque wrench till crews do not move any more. Pick-up of crews are noted on shrink discs.

After assembly t
here must be a remaining clearance s > 1 mm.
Outer flanges of hollow shaft in reach of shrink disc should be greased for corrosion protection.

Dismantling of shrink disc
1. Loosen clamping screws steadily and in a line. Each screw must only be loosened approximately. A quarter of a turn in the beginning to avoid unleveling of outer race. Do not totally remove screws!
2. Remove shaft respectively remove hub from shaft (remove corrosion that might be on shaft in front of hub first)
3. Remove shrink disc from hub..

Danger When shrink disc is dismantled inappropriately you might be injured!

Cleaning and lubrication of shrink disc
Dismantled shrink discs do not have to be disassembled and lubricated when used again. If shrink disc is dirty it has to be cleaned and lubricated again.
Use one of the below lubricants (Spray or Paste).
Lubricant (Mo S2) e.g..: Molykote 321 (), Molykote Spray (Powder-Spray), Molykote G Rapid, Aemasol MO 19P, AemasolDI0-sétral 57 N .
Lubricate clamping screws with general purpose lubricant Molykote BR 2 or similar.

4.9 Mounting of IEC-Adapter

1. Slide the coupling (1) up the motor shaft (2) until the hub rests against the shaft collar (a) and flange facing (a) lie on a single plane and that the highly chamfered side (b) faces the motor flange (3). This guarantees the correct distance between the coupling and the coupling shaft (4).

2. Tighten the radial locking screw (5) in the hub.

3. Implace the motor on IEC-Adapter (6). In doing so, insure that the socket pins (7) have been correctly inserted into the bore holes (c) of the coupling ring.

4. Screw the motor an the IEC-Adapter together.

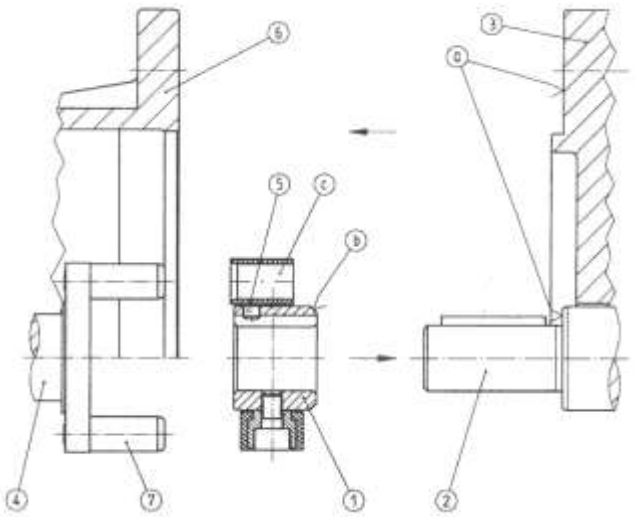

Note: We recommend to use anti-corrosion agents on motor shaft before mounting coupling hub.

4.10 Mounting of IEC-Adapter with adapter flange

1. Slide the coupling (1) up the motor shaft (2) up to distance X between hub and shaft collar. It is essential that shaft collar (a) and flange (a) lie in line and the highly chamfered side (b) faces to motor flange (3). This guarantees the correct distance between the coupling and the coupling shaft (4).

2. Tighten the radial locking screw (5) in the hub.

3. Implace the motor with adapter flange (8) on IEC-Adapter (6).. Ensure that socket pins (7) have been correctly inserted into the bore holes (c) of the coupling ring.

4. Screw the motor on IEC-Adapter.

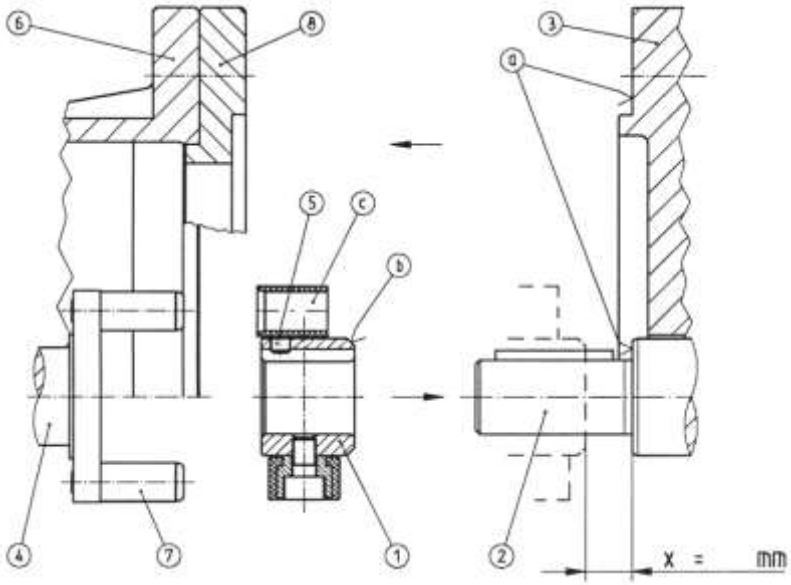

Note: We recommend to use anti-corrosion agents on motor shaft before mounting coupling hub.

4.11 Mounting of IEC-Adapter by SM041

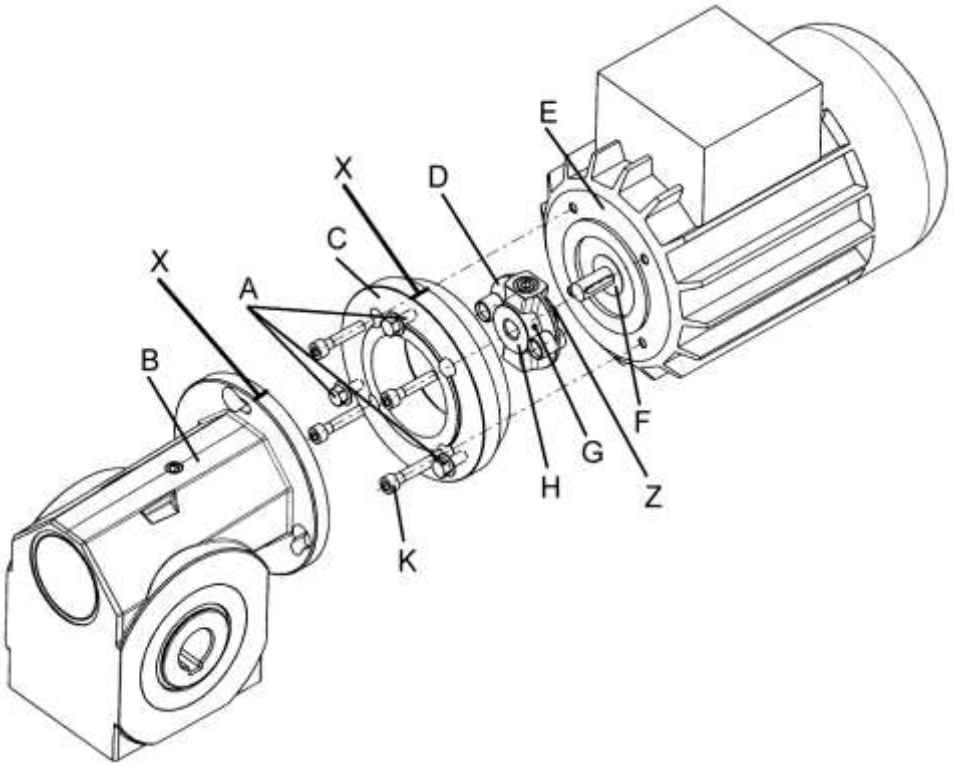

Gearbox (B) is supplied complete with Motor adaptor (C) and fixing screws (K) for Motor (E).

1. Loosen 3 locking screws (A) on gearbox side (do not take out!) Note marking “X”. Remove Motor adaptor (C) from gearbox by turning (Bayonet). Then take off coupling (D) from drive pins.

2. Slide on coupling with face (Z) of the Coupling hub (H) onto the motor shaft towards motor flange side (E) untill coupling hub (H) mounts to shaft collar (F). It is essential that shaft collar and flange face of motor are in line. Tighten radial locking screw (G) of coupling hub.

3. Put on motor adaptor (C) on motor flange and align according to required terminal box position. Orientate according to marking “X” on adaptor. Screw adaptor on motor flange.

4. Put motor with adaptor on gearbox and position by turning (bayonet). Markings on adaptor and gearbox have to be in line. Then tighten the 3 locking screws (A).

Allowed loads

Below load dates must not be exceeded by fixing a motor.

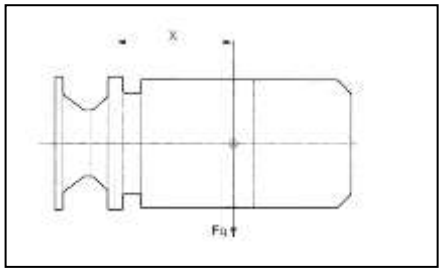

IEC Adapter size	X (mm)	Fq (N)
56	72	350
63/71	75	530
80/90	112	420
100/112	142	2000
132	184	4700
160/180	250	4600

Maximum allowed weight of attached motor Fqmax has to be reduced linearly when distance of centre of gravity x is increased. When distance of centre of gravity x is reduced no increase of maximum allowed weight Fqmax is allowed.

4.12 Mounting on free input shaft

For mounting of input drive element see chapter „Mounting of Input and output shafts.

Variation with centring ring
Mounting of applications an input cover with centring ring.

1. To fix application provide screws in adequate lengths.
2. Clean joining faces and centring ring.
3. Put application on centring ring and tighten clamping screws with protection element and pick-up TA.

5 Installation

Check appropriate oil level before starting. Oil control and drain screws as well as breather breather screws and -valves must be easily accessible.

5.1 Control lubricant with Oil level screw

The 4-step gearboxes of series SR need a higher oil level which is necessary for sufficient lubrication,. Therefore added oillevel screws nut no be used. In this case necessarily contact REHFUSS!

1. Switch geared motor dead, make sure it cannot be started accidentally!
2. remove Oillevel screw..
3. If required correct filling level, fix oillevel screw again (insert sealing ring and seal with sealing liquid).

5.2 Control lubricant on gearboxes without oil level screw

Below series of gearboxes have no oil level screw:
SM(N)/SSM
Oillevel is controlled with oil filling screw on these gearboxes.

1. Switch geared motor dead, make sure it cannot be started accidentally!
2. Put up gearboxes in mounting positions B6 or B7 i.e. Oil filling screw is used as oillevel screw.
3. Loosen oil filling screw..
4. Oil level has to be up to thread..
5. Seal oillevel screw of gearbox after controlling lubricant with liquid sealant..

5.3 Starting of worm gearbox

warmup time
Worm gearboxes need a warmup time of at least 24 hours, to reach maximum performance. Is gearbox operated in both turning directions, a warmup time for each of the directions is necessary. Average reduction of performance during warmup time is approximately 5%.

5.4 Starting of helical and shaft mounted gearboxes

There are no special instructions for installation of helical or shaft mounted gearboxes if gearboxes are mounted according to chapter “mechanical Installation”.

5.5 Starting gearboxes / geared motors

Solo gearboxes
Ensure that Values stated on nameplate of gearboxes with IEC-Adapter or free input shaft are not exceeded. Prevent overload of gearbox.

Mainsloaded motors
Make sure that information stated on nameplates of gearbox and motor correspond to ambient conditions in site.

Geared motors used with frequency inverters
Make sure geared motor is certified for inverter use. Parameter of inverter have to prevent overload of gearbox. For allowed power rate of gearbox see nameplate.

6 Inspection and Maintenance

Plastic surfaces must only be wiped damply (electrostatic charging).
Make sure that there is no dust accumulation of more than 5 mm (clean regularly).

6.1 Inspection and maintenance intervals

Interval	What is to do?
every 3000 operating hours, at least every 6 months	Control oil and lubricant level View seals on leaking, replace if required Check rubber buffer on gearboxes with torque arm
According to operation conditions (see below table), at least every 3 year according to oil temperature	Replace mineral oil Replace grease of rolling bearing if required Replace shaft seals
According to operation conditions (see below table), at least every 5 year according to oil temperature	Replace synthetic oil Replace grease of rolling bearing if required Replace shaft seals
variable (depending on external influences)	Repair or replace paint / corrosion protection

Gearboxes SM(N) / SSM have lifetime lubricant are so need no maintenance

6.2 Intervals for changing lubricants

Intervals for replacement on standard-gearboxes with mineral oil filling under regular conditions

Permanent Lubricant temperature- in °C	Replace lubricant after operating hours
Up to 70	10000
71 - 80	7500
81 - 90	5000
91 - 100	2500
over 101	1250

Intervals for replacement on standard-gearboxes with synthetic oil filling under regular conditions

Permanent Lubricant temperature- in °C	Replace lubricant after operating hours
Up to 70	20000
71 - 80	15000
81 - 90	10000
91 - 100	5000
over 101	2500

On special design under heavy / aggressive ambient conditions change lubricant more often!

Rehfuss recommends when replacing lubricant on rolling bearings with grease filling replace grease as well. Below quantities are needed:

For fast running bearings (Motor and gearbox –input side) fill hollow spaces between rolling elements up to 1/3

For slowly running bearings (in gearbox and gearbox output side): Fill 2/3 of hollow spaces with grease

6.3 Intervals for changing rolling bearings

Rolling bearings are oiled or greased. Replace bearings before they fail. Indicators are running noise and temperature..
According to performance below average values have to be considered

performance fb	Replace after operating hours
1	2500
1,2	4500
1,4	7000
1,6	10500
1,8	15000
2,0	20000

6.4 Inspection / Maintenance gearbox

As standard we use synthetic lubricant. Position of Oillevel and drain screws and breather valve see drawings of the variations. All loosened screws have to be tightened again with screw protection! Do not mix synthetic oils with each other or with mineral oils.

Check Lubricant level

1. Switch gearbox dead, Protect against unintended start! Wait till gearbox has cooled down – danger of burning!
2. When design has be amended please contact REHFUSS!
3. Check lubricant according to chapter start up „Check oil level on gearboxes with/without oil level screw“

Replace lubricant

Replace lubricant only on gearboxes that are worm from operation.

1. Switch gearbox dead, Protect against unintended start! Wait till gearbox has cooled down – danger of burning!
   Note: Gearbox has to be warm however as total draining is more difficult when oil is too cold.
2. For gearboxes with drain screw/Oillevel screw:
3. Put vessel under drain screw.
4. remove oillevel screw, breather screw /-valve and drain screw
5. drain oil totally
6. insert oillevel screw again.
7. Replace lubrication of same kind into breather bore (otherwise contact service) quantity according to variation (see chapter „lubricant capacity“) or to instruction on nameplate. Check on oillevel screw.
8. insert oillevel screw.
9. insert breather screw/valve.

Replace shaft seals

1. Switch gearbox dead, Protect against unintended start! Wait till gearbox has cooled down – danger of burning!
2. Ensure there is sufficient grease between dirt lip and sealing lip according to variation
3. When using double shaft seals fill space between 1/3 with grease.

6.5 Inspection / maintenance IEC-adapter

interval	What to do?
every 3000 operating hours, at least every 6 months	Check clearance View coupling View adapter for leaking
after 25000 - 30000 operating hours	Replace rolling bearing grease if required Replace coupling

6.6 Inspection / Maintenance free input shaft

interval	What to do?
every 3000 operating hours, at least every 6 months	Check running noise View for leaking
after 25000 - 30000 operating hours	Replace rolling bearing grease if required Replace shaft seals

7 Malfunctions

Service
Please provide the following information if you require assistance from our customer service:

Nameplate information (complete), Nature and extent of the problem, time and circumstances of problem, presumed cause

7.1 Malfunction on gearbox

Problem	Possible cause	Solution
unusual, continuous running noise	Noise reeling/grinding: damage on bearing	Check lubricant and quantity – (see „inspection and maintenance“), contact REHFUSS replace bearing.
	noise knocking: irregular toothing	Contact REHFUSS
Unusual, differential running noise	Alien element in lubricant	Check lubricant and quantity – (see „inspection and maintenance“), stop engine. Contact REHFUSS
Oil leaking On motor shaft seals On gear flange On output shaft seal	Bearing defective	Contact REHFUSS
Oil leaking on breather valve	Too much oil Drive used in incorrect mounting position Frequent cold started (oil frothing) and / or high oil level Breather valve dirty	contact REHFUSS
Output shaft not turning although motor is running or input shaft is turned	Connection shaft-hub in gear interrupted	Return to REHFUSS for repair.

Leaking oil/grease on shaft seal (low quantities) during warm up time (24 operating hours) are considered normal (see DIN 3761).

7.2 Malfunction on IEC-Adapter

Problem	Possible cause	Solution
Unusual, continuous running noise	Noise reeling/grinding	contact REHFUSS
Oil leaking	Sealing defective	contact REHFUSS
Output shaft not turning, although motor running or input shaft is turned	Connection shaft-hub in gear is interrupted	Return to REHFUSS for repair.
Changing noise and/or vibrations occurring	Coupling worn, short term transmission of torque by contact with metal Screw for fastening hub axial loose.	Replace coupling Tighten screw and protect
Premature wearing of coupling	Contact with aggressive oils, influence of Ozone, ambient temperature to high etc. which cause a physical change of coupling or too high temperatures, overload	contact REHFUSS

7.3 Malfunction on free input shaft

Problem	Possible cause	Solution
Unusual, continuous running noise	Noise reeling/grinding damaged on bearing	Contact REHFUSS
Oil leaking	Sealing defective	contact REHFUSS
Output shaft not turning, although input shaft is turned	Connection shaft-hub in gear is interrupted	Return to REHFUSS for repair

8 Mounting positions

8.1 General information about mounting positions

Description of mounting positions
The following figures show position of gearbox on the various mounting positions

8.2 Mounting position SR 1-step

Stirnradgetriebe	Helical gearboxes	Réducteurs à engrenages
Stirnradgetriebemotoren	Helical geared motors	Motoréducteurs à engrenages
1 - stufig Einbaulagen	1 - stage Mounting configurations	1 - étage Positions de montage

○ Entlüftung	Breather plug	Désaérage
◒ Ölstand	Oil level	Niveau d' huile
● Ablaß	Drain plug	Vidange

Bauform		Mounting position		Position de montage			
B3	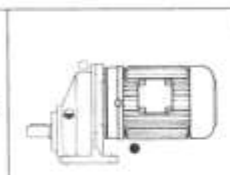	B8	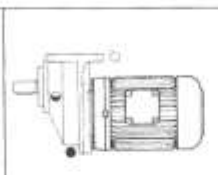	V1		V6	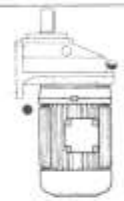
B6	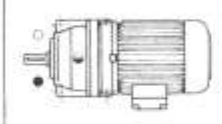	B5 B14	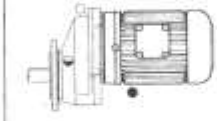	V3		V18	
B7	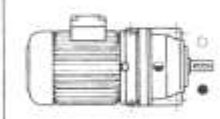	B34	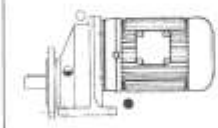	V5	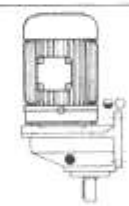	V19	

Lage des Klemmenkastens **Position of terminal box** **Position de la boîte de bornes**

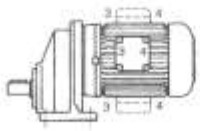

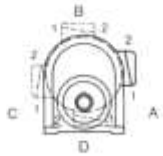

Im Normalfall und wenn bei der Bestellung nicht anders angegeben, sitzt der Klemmenkasten bei A, die Kabeleinführung bei 1. Wird eine davon abweichende Anordnung des Klemmenkastens bzw. der Kabeleinführung gewünscht, so ist dies bei der Bestellung anzugeben.

Bei Bremsmotoren ist die Kabeleinführung nur bei 1 oder 2 möglich.

Normally and unless otherwise specified, the terminal box is in pos. A, and the cable entry is in pos. 1. If other terminal box or cable entry positions are required, they are to be specified when ordering.

With brake motors only cable entry positions 1 or 2 are possible.

Normalement, et si rien d'autre n'a été indiqué lors de la commande, la boîte de bornes se trouve en position A, l'entrée de câbles en position 1. Si le client désire une autre disposition de la boîte de bornes ou de l'entrée de câbles, prière de l'indiquer lors de la commande.

Pour les moteurs-freins, l'entrée de câbles ne peut être qu'en position 1 ou 2.

8.3 Mounting position SR 2-step

Stirnradgetriebe	Helical gearboxes	Réducteurs à engrenages
Stirnradgetriebemotoren	Helical geared motors	Motoréducteurs à engrenages
mehrstufig Einbaulagen	multi-stage Mounting configurations	plus-étages Positions de montage

○ Entlüftung	Breather plug	Désaérage
◒ Ölstand	Oil level	Niveau d' huile
● Ablaß	Drain plug	Vidange

Bauform		Mounting position		Position de montage	
B3	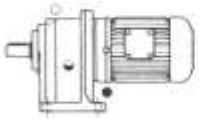	B8	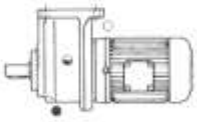	V1	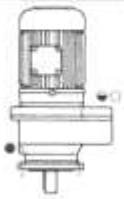	V6	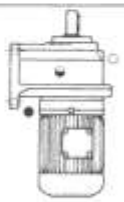
B6	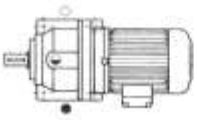	B5 B14	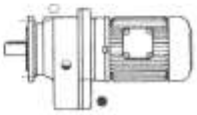	V3	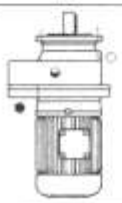	V18	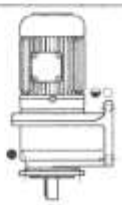
B7	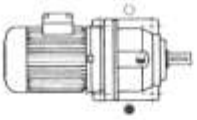	B34	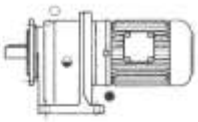	V5	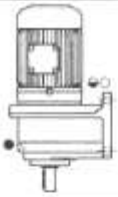	V19	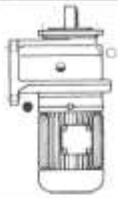

Lage des Klemmenkastens **Position of terminal box** **Position de la boîte de bornes**

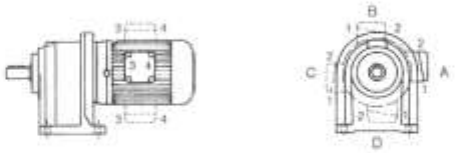

Im Normalfall und wenn bei der Bestellung nicht anders angegeben, sitzt der Klemmenkasten bei A, die Kabeleinführung bei 1. Wird eine davon abweichende Anordnung des Klemmenkastens bzw. der Kabeleinführung gewünscht, so ist dies bei der Bestellung anzugeben.

Bei Bremsmotoren ist die Kabeleinführung nur bei 1 oder 2 möglich.

Normally and unless otherwise specified, the terminal box is in pos. A, and the cable entry is in pos. 1. If other terminal box or cable entry positions are required, they are to be specified when ordering.

With brake motors only cable entry positions 1 or 2 are possible.

Normalement, et si rien d'autre n'a été indiqué lors de la commande, la boîte de bornes se trouve en position A, l'entrée de câbles en position 1. Si le client désire une autre disposition de la boîte de bornes ou de l'entrée de câbles, prière de l'indiquer lors de la commande.

Pour les moteurs-freins, l'entrée de câbles ne peut être qu'en position 1 ou 2.

8.4 Mounting position FG

Entlüftung	Breather plug	Désaérage
Ölstand	Oil level	Niveau d' hulie
Ablaß	Drain plug	Vidange

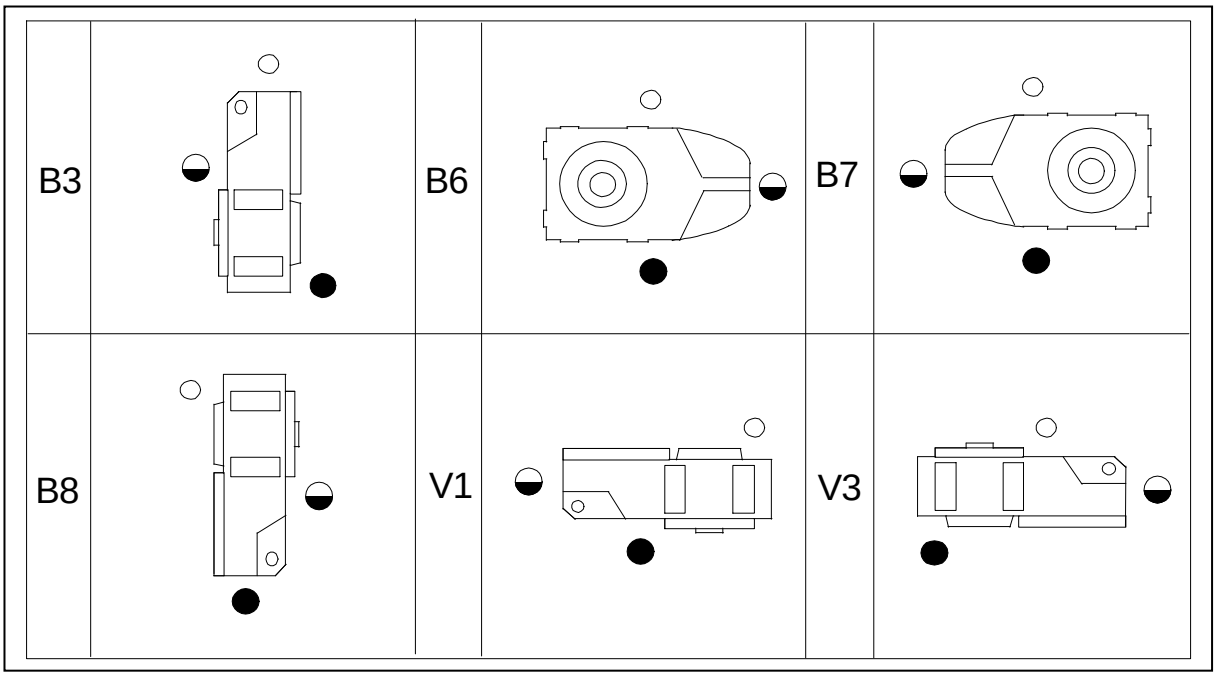

Lage des Klemmenkastens **Position of terminal box** **Position de la boîte à bornes**

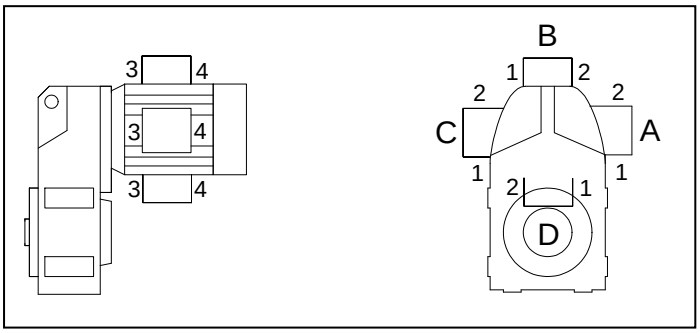

Normally and unless otherwise specified the Terminal box is in position A and the cable entry is in pos. 1. If other terminal box or cable entry positions are required they are to be specified when ordering.

With brake motors only cable entry positions 1 or 2 are possible..

8.5 Mounting position S

Schneckengetriebe	Worm gearbox	Réducteur à vis sans fin
Schneckengetriebemotoren	Worm geared motors	Motoréducteurs à vis sans fin
Einbaulagen	Mounting configurations	Positions de montage

○ Entlüftung
◒ Ölstand
● Ablaß

○ Breather plug
◒ Oil level
● Drain plug

○ Désaérage
◒ Niveau d'huile
● Vidange

Bauform Mounting position Position de montage		Bauform Mounting position Position de montage	
B3	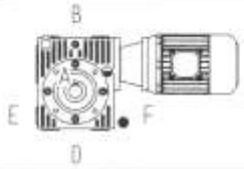	V5	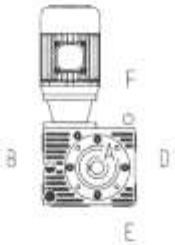
B6			
B7	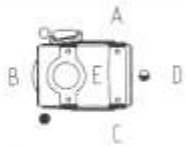	V6	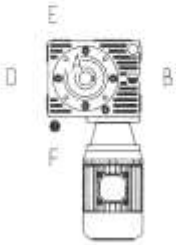
B8	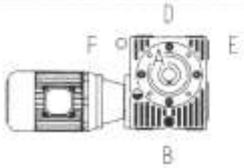		

Lage des Klemmenkastens

Position of terminal box

Position de la boîte de bornes

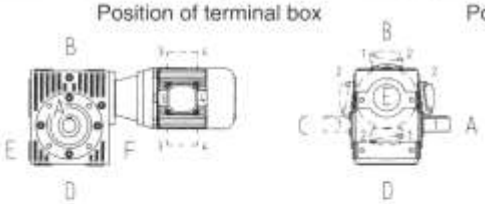

Im Normalfall und wenn bei der Bestellung nichts anders angegeben, sitzt der Klemmenkasten bei A, die Kabeleinführung bei 1. Wird eine davon abweichende Anordnung des Klemmenkastens bzw. der Kabeleinführung gewünscht, so ist dies bei der Bestellung anzugeben.

Bei Bremsmotoren ist die Kabeleinführung nur bei 1 oder 2 möglich

Normally and unless otherwise specified, the terminal box is in pos. A, and the cable entry is in pos. 1. If other terminal box or cable entry positions are required, they are to be specified when ordering.

With brake motors only cable entry positions 1 or 2 are possible.

Normalement, et si rien d'autre n'a été indiqué lors de la commande, la boîte de bornes se trouve en position A, l'entrée de câbles en position 1. Si le client désire une autre disposition de la boîte de bornes ou de l'entrée de câbles, prière de l'indiquer lors de la commande.

Pour les moteurs-freins, l'entrée de câbles ne peut être qu'en position 1 ou 2.

8.6 Mounting position SS

Stirnrad-Schneckengetriebe Stirnrad-Schneckengetriebemotoren	Helical worm gearbox Helical worm geared motors	Réducteurs à engrenages et vis sans fin Motoréducteurs à engrenages et vis sans fin
Einbaulagen	Mounting configurations	Positions de montage

○ Entlüftung
▾ Ölstand
● Ablaß

○ Breather plug
▾ Oil level
● Drain plug

○ Désaérage
▾ Niveau d'huile
● Vidange

Bauform Mounting position Position de montage		Bauform Mounting position Position de montage	
B3	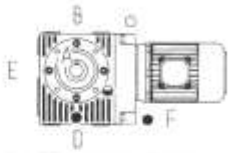	V5	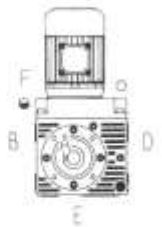
B6	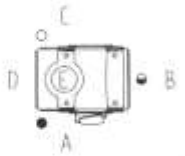		
B7	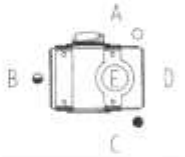	V6	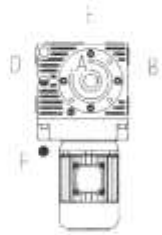
B8	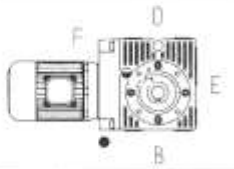		

Lage des Klemmenkastens

Position of terminal box

Position de la boîte de bornes

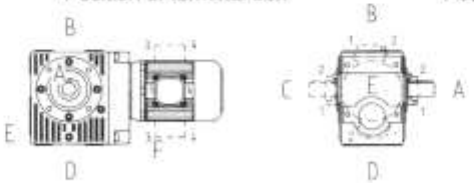

Im Normalfall und wenn bei der Bestellung nichts anders angegeben, sitzt der Klemmenkasten bei A, die Kabeleinführung bei 1. Wird eine davon abweichende Anordnung des Klemmenkastens bzw. der Kabeleinführung gewünscht, so ist dies bei der Bestellung anzugeben.

Normally and unless otherwise specified, the terminal box is in pos. A, and the cable entry is in pos. 1. If other terminal box or cable entry positions are required, they are to be specified when ordering.

Normalement et si rien d'autre n'a été indiqué lors de la commande, la boîte de bornes se trouve en position A, l'entrée de câbles en position 1. Si le client désire une autre disposition de la boîte de bornes ou de l'entrée de câbles, prière de l'indiquer lors de la commande.

Bei Bremsmotoren ist die Kabeleinführung nur bei 1 oder 2 möglich

With brake motors only cable entry positions 1 or 2 are possible.

Pour les moteurs-freins, l'entrée de câbles ne peut être qu'en position 1 ou 2.

8.7 Mounting position SM(N) / SSM

Bauform **Mounting position** **Position de montage**

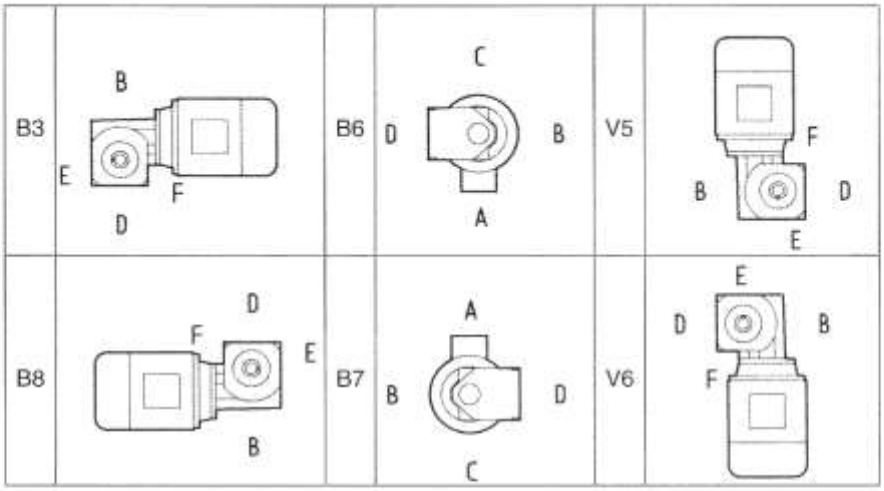

Lage des Klemmenkastens **Position of terminal box** **Position de la boîte de bornes**

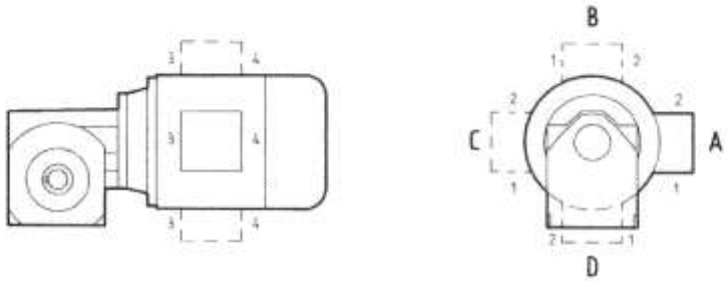

Im Normalfall und wenn bei der Bestellung nichts anders angegeben, befindet sich der Klemmenkasten bei A, die Kabeleinführung bei 1. Wird eine davon abweichende Anordnung des Klemmenkastens bzw. der Kabeleinführung gewünscht, so ist dies bei der Bestellung anzugeben.

Bei Bremsmotoren ist die Kabeleinführung nur bei 1 oder 2 möglich.

Normally and unless otherwise specified, the terminal box is in pos. A, and the cable entry is in pos. 1. If other terminal box or cable entry positions are required, they are to be specified when ordering.

With brake motors only cable entry positions 1 or 2 are possible.

Normalement, et si rien d'autre n'a été indiqué lors de la commande, la boîte de bornes se trouve en position A, l'entrée de câbles en position 1. Si le client désire une autre disposition de la boîte de bornes ou de l'entrée de câbles, prière de l'indiquer lors de la commande.

Pour les moteurs-freins, l'entrée de câbles ne peut être qu'en position 1 ou 2.

Notes to SM(N) / SSM Series

SM(N) / SSM – gears and geared motors are independent from mounting positions. For better orientation we show mounting positions for this series as well.

Please note: no breather valves nor oillevel screws nor drain screws can be fixed on SM(N) / SSM – gears and geared motors.

9 Lubricants

General

If not agreed specially REHFUSS supplies explosion proof drives with lubricant according to specification of gear and mounting position. For this it is essential to advise mounting position when ordering the drive. When design is amended later please contact REHFUSS necessarily.

Lubricant / Quantity
Please see the following table “capacity” for requested lubricant quantities. It is essential to watch oillevel screw for indicator of exact quantity. For allowed lubrications please see table “lubrications”.

Grease for rolling bearings
Rolling bearings of explosion proof gears and motors are supplied filled with below stated greases. Rehfuss recommends to replace grease as well when replacing lubricant.

Below quantities are needed :

For fast running bearings (Motor and gearbox –input side) fill hollow spaces between rolling elements up to 1/3

For slowly running bearings (in gearbox and gearbox output side): Fill 2/3 of hollow spaces with grease

Table: Capacity in cm³

Getriebe Gearbox Réducteur	Bauform B3	Mounting position B6/B7	 B8	 V5	 V6	Position de montage B5	 B5 B6/B7	 B5 B8	 V1	 V3
Stirnradgetriebe 1-stufig	**Helical gearbox 1-stage**			**Réducteur à engrenages 1-étage**						
SR 120	150	250	400	275	400	200	250	400	275	350
SR 130	300	450	650	600	600	300	450	650	600	600
SR 140	400	700	1100	1000	1000	400	700	1100	1000	1000
SR 160	1000	1200	1600	1800	1600	750	1100	1500	1400	1500
Stirnradgetriebe 2-stufig	**Helical gearbox 2-stage**			**Réducteur à engrenages 2-étages**						
SR 210	200	200	200	250	250	150	200	200	200	200
SR 220	250	250	300	300	400	200	250	300	325	400
SR 230	500	500	600	700	750	400	550	550	550	650
SR 240	700	700	800	950	1150	600	600	700	900	1000
SR 260	1300	1300	1300	2200	2100	1300	1150	1300	1900	1800
SR 270	4500	7500	6500	13000	11500	4000	7000	6500	13000	11000
Stirnradgetriebe 3-stufig	**Helical gearbox 3-stage**			**Réducteur à engrenages 3-étages**						
SR 320	400	400	450	700	600	300	350	450	600	600
SR 330	700	800	800	1300	1100	550	650	650	1150	950
SR 340	950	800	1000	1700	1750	850	650	800	1400	1500
SR 360	1500	2250	1800	3100	2850	1500	2100	1900	2800	2600
SR 370	4200	7200	6200	12700	11000	4000	7500	6200	12500	13000
Schneckengetriebe	**Worm gearbox**			**Réducteur à vis sans fin**						
SM 011	50	Synthetisches Öl			Synthetic oil			Huile synthét		
SM(N) 021	70									
SM(N) 031	120									
SM 041	200									
SM(N) 051	300									
SM 061	600									
Schneckengetriebe	**Worm gearbox**			**Réducteur à vis sans fin**						
S 030	250	300	300	300	300					
S 040	700	600	600	650	650					
S 050	1200	1100	1000	1300	1300					
Stirnrad-Schneckengetriebe	**Helical worm gearbox**			**Réducteur à engrenages et vis sans fin**						
SS 130	350	450	500	550	500					
SS 140	700	850	1200	1400	1200					
SS 150	1200	1350	1600	2400	1800					
SS 160	1700	2800	3600	3800	3600					
SS 170	3000	5000	6500	9000	6700					
Stirnrad-Schneckengetriebe	**Helical worm gearbox**			**Réducteur à engrenages et vis sans fin**						
SSM 121	190	Synthetisches Öl			Synthetic oil			Huile synthét		
SSM 131	220									
SSM 151	600									
SSM 161	1200									
Reibradgetriebe 1-stufig	**Variable speed friction drive 1-stage**					**Variateur á friction 1-étage**				
D 110	100	150	150	200	200	100	150	150	200	200
D 120	250	250	250	350	450	250	250	250	350	450
D 130	300	450	450	450	650	300	450	450	450	650
D23-RU23-1	400	520	400	800	875	400	520	400	800	875
D3-RU3	1400	Fliessfett			Fluid grease			Graisse fluide		
Reibradgetriebe 2-stufig	**Variable speed friction drive 2-stage**					**Variateur á friction 2-étages**				
D 210	200	300/250	275	325	450	200	300/250	275	325	450
D 220	400	500/550	500	550	600	400	500/550	500	550	600
D 230	500	850/1000	1000	1000	1450	500	850/1000	1000	1000	1450
D23-RU23-2	850	900/700	550	800	1300	850	900/700	550	800	1300
Flachgetriebe	**Shaft mounted gearbox**					**Réducteur à arbres parallèles**				
FG 210	600	600	700						750	750
FG 220	800	800	800						1000	1000
FG 240	1900	1500	1400						1400	1200
FG 250	3000	3000	3200						3200	3200
FG 260	4000	4000	4200						4200	4200

Table: Lubrications

Anwendung (Typen) Application Utilisation	Schmierstoff Lubrication Lubrifiant	Umgeb.temp Amb.Temp. Temp.Amb. °C	ISO VG (cST) 40°C mm²/s	**Rehfuss Standard**	Agip	Mobil	Shell	ARAL	BP	Klüber	Castrol
SR	Mineralöl Mineral Oil Huile mineral	-15 bis +40	VG150		BLASIA 150	Mobilgear XMP 150		Degol BG150 Plus	Energol GR-XF 150	GEM 1-150N	Alpha SP150
S		-10 bis +40	VG220		BLASIA 220	Mobilgear XMP 220	Omala F220	Degol BG220 Plus	Energol GR-XF 220	GEM 1-220N	Alpha SP220
SS		-5 bis +40	VG320	Agip BLASIA 320	BLASIA 320	Mobilgear XMP 320	Omala F320	Degol BG320 Plus	Energol GR-XF 320	GEM 1-320N	Alpha SP320
FG		0 bis +50	VG680		BLASIA 680	Mobilgear XMP 680	Omala F680	Degol BG680 Plus	Energol GR-XF 680	GEM 1-680N	Alpha SP680
	Fett Grease Graisse	-20 bis +50		Castrol Spheerol EPL2	GR-MU 2/3	Mobilux EP2	Alvania EP2	ARALUP HLP2	Energrease LS2 Energrease LS2-EP2	Klüberplex BEM 41.132	Castrol Spheerol EPL2
SM(N)	Synth. Öl (Polyglykol) Synthetic Oil (Polygycol) Huile synthétique	-30 bis +10	VG150		BLASIA S150	Glygoyle 150	Omala S4 WE150	Degol GS150	Enersyn SG-XP 150	Klübersynth GH 6-150	Alphasyn GS150
		-25 bis +25	VG220		BLASIA S220	Glygoyle 220	Omala S4 WE220	Degol GS220	Enersyn SG-XP 220	Klübersynth GH 6-220	Alphasyn GS220
		-20 bis +40	VG320	Agip BLASIA S320	BLASIA S320	Glygoyle 320	Omala S4 WE320	Degol GS320	Enersyn SG-XP 320	Klübersynth GH 6-320	Alphasyn GS320
SSM		-10 bis +50	VG460		BLASIA S460	Glygoyle 460	Omala S4 WE460	Degol GS460	Enersyn SG-XP 460	Klübersynth GH 6-460	Alphasyn GS460
		-5 bis +60	VG680			Glygoyle 680	Omala S4 WE680	Degol GS680	Enersyn SG-XP 680	Klübersynth GH 6-680	Alphasyn GS680
	synth.Fett Synth.Grease Graisse synth.	-20 bis +40		Mobil Chassis LBZ		Mobil Chassis LBZ	Alvania RLB 2		Energrease SY 2202	Isoflex Topas NCA 52 Petamo GHY 133N	Speerol SY 2202
	Lebensmittel verträgl.Öl. (synthetisch) lubricant for food industrie (synthetic) Huile approuvè pour qualitè alimentaire (synth)	-20 bis +40	VG320	VÖLKEL HELVOSYT SLMG 320		SHC Cibus 320	Cassida WG320			Klübersynth UH1 6-320	Tribol Food-Proof 1800/320
	Lebensmittel verträgl.Fett (synthetisch) grease for food industry (syntetic) Graisse approuvè pour qualitè alimentaire (synth)	-20 bis +40		BOSS Bossplex 5702 EP		Mobilgrease FM222	Cassida RLS2			Klübersynth UH1 14-151	Obeen UF2
Wälzlager Bearings Roulements	Fett Grease Graisse	-30 bis +60				Mobilux EP2	Alvania EP3	ARALUP HL3	BP Energrease LS3	Klüberplex BEM 41.141	
	Synth.Fett Synth.Grease Graisse synth.	+60 bis +100								Klübersynth HB 74-401	